McLaren
AUTOMOTIVE

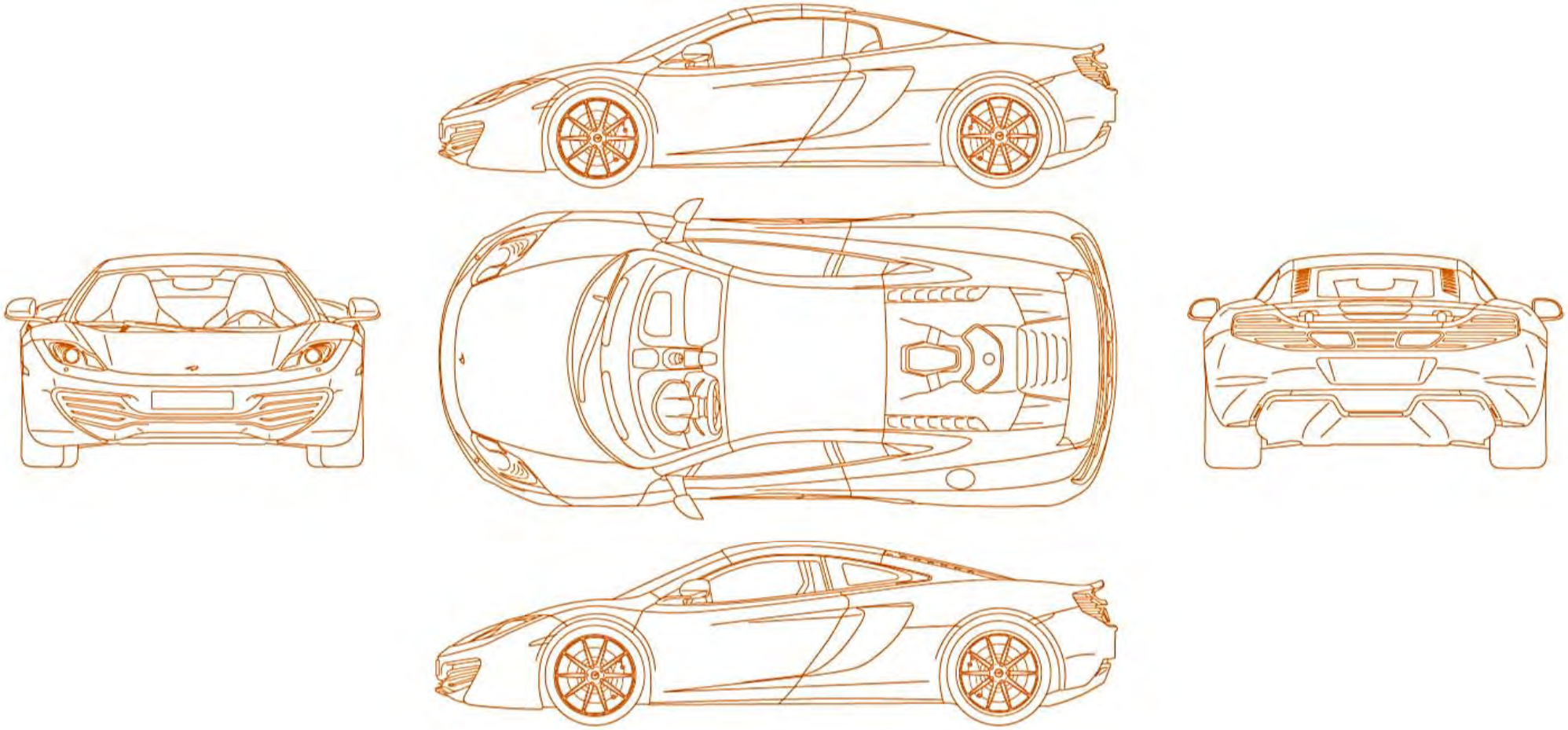

MP4-12C

Repair Procedures:

Fender Cover Inner	2
Adjust Headlamp	4
Luggage Bin	5
Bleed Steering Fluid	7
Engine Oil Level	9
Lift Vehicle	13
Wheel – Remove	15
Brakes – Check Brake Discs	17
Front Brakes – Pads	37
Front Brakes – Calipers	41
Front Brakes – Discs	46
Front Brakes – Hoses	49
Rear Brakes – Pads	54
Rear Brakes – Calipers	58
Rear Brakes – Discs	62
Rear Brakes – Hoses	66
Parking Brakes – Pads	71
Parking Brakes – Actuator	74
Parking Brakes – Caliper	77
Brakes – Bleed	80
Brakes – Bed	88
Floor – Engine and Fuel Tank Panel	91
Floor – Front Panel	93
Floor – Tunnel Panel	96
Floor – Rear Lower Extension Panel	98
Floor – Guide Vanes	102
Floor – Transmission Panel	106
Suspension – Front Upper Wishbone	108
Suspension – Front Lower Wishbone	111
Suspension – Rear Upper Wishbone	114
Suspension – Rear Lower Wishbone	118
Suspension – Steering Track Rod	122
Suspension – Front Upright	125
Suspension – Front Hub	128
Suspension – Rear Tie Rod	130
Suspension – Rear Upright	133
Suspension – Rear Hub	137
Suspension – Rear Drop Link	139
Suspension – Z-Bar	141
Suspension – Wheel Alignment	144
Wheel Liner Rear	146
Engine Oil – Change	149
Turbo Oil Return Hose	156
Air Filter – Replace	159
Coolant – Drain Fluid	161
Clutch – Drain Fluid	170
Clutch – Replace Filter	175
Floor – Diffuser Floor Panel	177
Transmission – Drain Fluid	180
Transmission – Replace Filter	183
Fuel Filter – Replace	185
Body – Remove Door Cover	190
Body – Remove Lower Rear	191
Body – Remove Side Lower	197
Body – Remove Radiator Grills	199
Intake Sound Generator – Replace	201
Engine Compartment Side Cover	203
Spark Plugs – Replace	208

Service Sheets:

Mileage Dependent Tasks	215
1 Year / 10k Mile	216
2 Year / 20k Mile	221
3 Year / 30k Mile	226
4 Year / 40k Mile	231
5 Year / 50k Mile	236
6 Year / 60k Mile	241
7 Year / 70k Mile	245
8 Year / 80k Mile	250
9 Year / 90k Mile	255
10 Year / 100k Mile	260
11 Year / 110k Mile	265
12 Year / 120k Mile	270
13 Year / 130k Mile	275
14 Year / 140k Mile	289
15 Year / 150k Mile	285
Track Inspection	290

Instructions

FG02 Body Systems / A04 Panels Glazing Paint / Roof Panels Fenders Fuel Filler / AA-RM-02A04-03-001 - Remove/install fender cover - Inner

Remove fender cover - Inner

Care Point: Work carefully to prevent paint damage.

1. Open luggage compartment lid.

Care Point: Start pulling up cover fender from rear edge.

2. Remove fender inner (1).

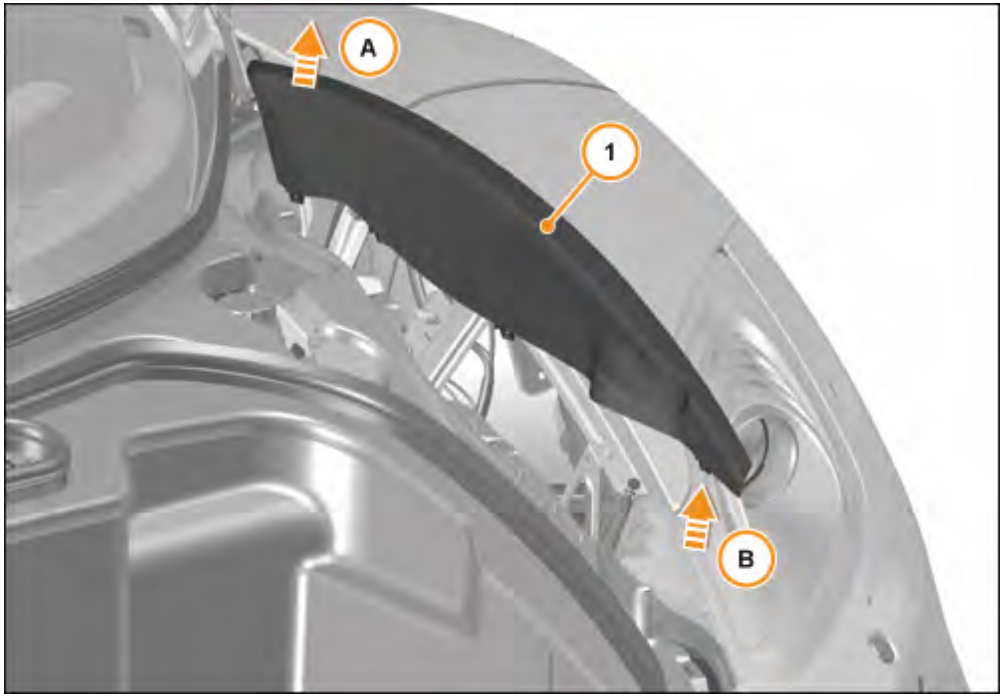

Install fender cover - Inner

Care Point: Start with front edge because of firtree clip and ensure alignment with hole.

1. Install components in reverse order.

Instructions

FG02 Body Systems / A02 Exterior Trim Lighting Wipers / Frontlamps Side Markers / AA-RM-02A02-04-003 - Adjust headlamp

Preparation work

1. AA-RM-02A04-03-001 Remove/install fender cover - Inner

Care Point: Use suitable headlamp alignment equipment.

Care Point: First technician carries out adjustment, whilst second technician operates headlamp alignment equipment.

Adjust headlamp

Care Point: Inboard adjuster for vertical adjustment, outboard adjuster for horizontal adjustment.

1. Use adjuster for vertical adjustment (1).
2. Use adjuster for horizontal adjustment (2).

Care Point: Height equals 62cm with inclination of -1.2%. Ensure dipped beams are +/- 0.1% of 1.2%.

3. Carry out adjustment to country specific legislation in regards to angle and height.
4. Check headlamp functionality.

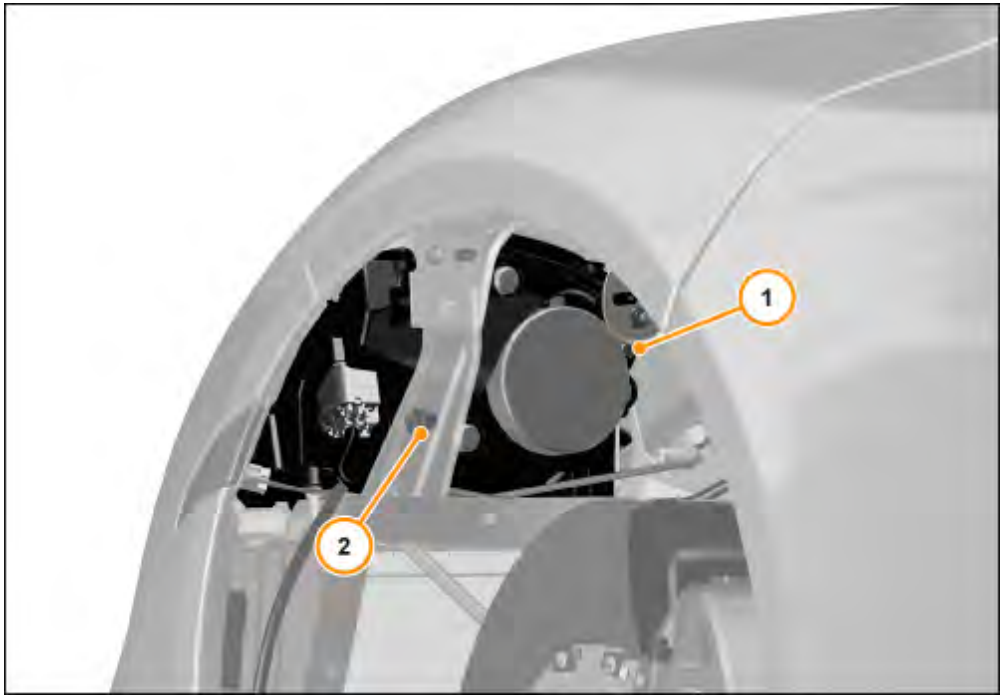

Instructions

FG02 Body Systems / A02 Exterior Trim Lighting Wipers / Luggage Cell Ducts Wheelarch Liners / AA-RM-02A02-03-004 - Remove/install luggage bin - Rear

Remove luggage bin - Rear

1. Open luggage compartment lid.
2. Remove contents of luggage bin.
3. Remove luggage bin finisher.
4. Remove bolts (1). M6 x 16 4 Nm
5. Remove fixings (2).
6. Remove luggage bin (3).

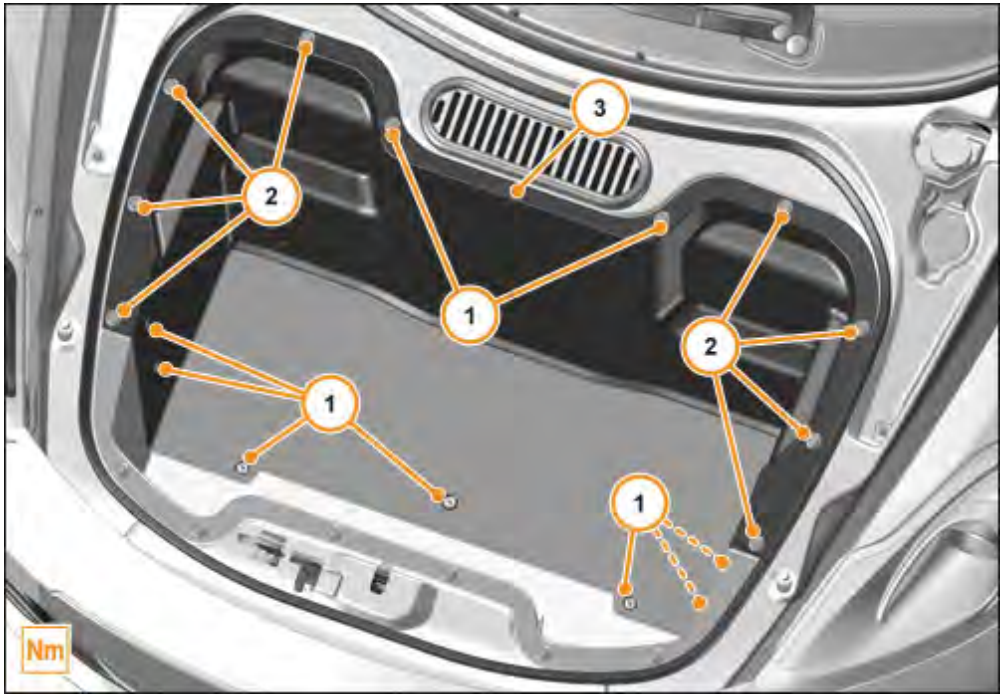

Install luggage bin - Rear

1. Install components in reverse order.

Torque settings

FG02 Body Systems / A02 Exterior Trim Lighting Wipers / Luggage Cell Ducts Wheelarch Liners / AA-RM-02A02-03-004 - Remove/install luggage bin - Rear

Description	Dimension	Value
Bolt luggage bin - Rear	M6 x 16	4 Nm

Instructions

FG03 Chassis / D01 Steering System / Steering System / AA-RM-03D01-01-008 - Fill/bleed fluid - Steering system

WARNING!

Risk of injury and poisoning working with hydraulic fluid under pressure!
Risk of injury to skin or eyes from hydraulic fluid spraying out under pressure. If any part of the hydraulic circuit has failed, a possibility of the system not depressurising can occur. Extra precaution is required in this event. If hydraulic fluid is swallowed, this can lead to poisoning symptoms such as headache, dizziness, nausea, vomiting, diarrhoea, cramps and unconsciousness. Always wear skin protection cream, protective gloves and safety glasses when working on a potentially pressurised system.

Fill/bleed fluid - Steering system

1. Open bonnet.
2. Remove power steering reservoir cap (1).
3. Fill up power steering reservoir (1.5 litres maximum). Pentosin CHF202

Care Point: Ensure the car is on the ground.

4. Turn steering wheel from lock (A) to lock (B) three times.
5. Check power steering fluid and fill up if necessary.
6. Install power steering reservoir cap.

Instructions

Check oil level

Care Point: The oil level check is completed with the engine running at 2000rpm for 40 seconds.

1. The following conditions must be met to allow an engine oil level check to be carried out:

   Care Point:
   - The vehicle must be stationary and positioned on a level surface.
   - Engine running with the throttle pedal fully released.
   - Neutral gear selected and the foot brake applied (use left foot).

   If any of these conditions are not met, a warning message will be displayed on the instrument cluster.

   Care Point: The foot brake must be applied for the entire duration of the oil level check.

   Care Point: The oil level status can be viewed in the Vehicle information section in the left hand instrument cluster display.

2. Start the engine and navigate to the left hand cluster display to oil level check.

3. If all prerequisite conditions have been met you will be taken to the apply throttle screen.

Care Point: Allow the engine oil temperature to reach a temperature of 70°C (measured via the oil level sensor).

Care Point: The oil level check will limit the rpm input to 2000rpm once the test has begun, but the throttle must be applied for the duration of the oil level check. If the throttle pedal is released and the engine speed drops below 2000 rpm during the oil level check, then the oil level check will abort, and return you to the apply throttle screen.

The 40 second countdown timer

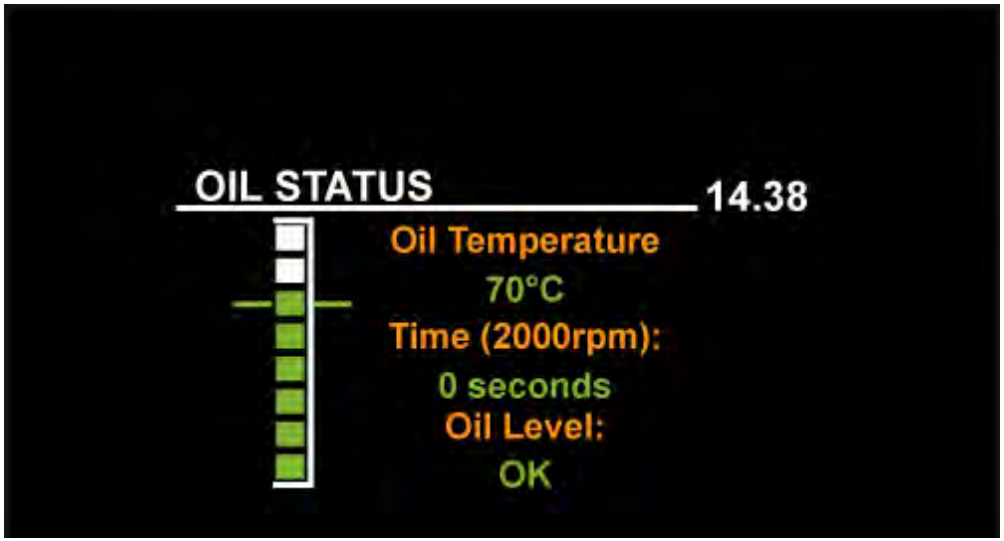

The 40 second countdown timer will begin when the oil temperature has exceeded 40°C.

4. Apply throttle and raise the engine speed to 2000 rpm.
   The 40 second countdown timer will begin when the oil temperature has exceeded 40°C.

   Care Point: The line on the display indicates the target oil level.

   Care Point: Once the oil level check has been completed and returned a value, do not continue to test the system. This may lead to aeration of the oil and return a false value. To end the oil level check, release the throttle and abort back to the vehicle info menu.

5. When the timer has reached '0

Care Point: When the timer has reached '0

Care Point: The engine must be switched off and the instrument cluster must be returned to the vehicle info menu before carrying out an oil top up and retest.

6. If the engine oil is below target level, top up with the correct quantity of oil, in accordance to the graphic opposite. Approximately 0.50 litres is required to raise the level from minimum to target level.
7. Carry out the oil level check process to ensure the level is correct.
8. Top up as required by repeating steps 1-6.

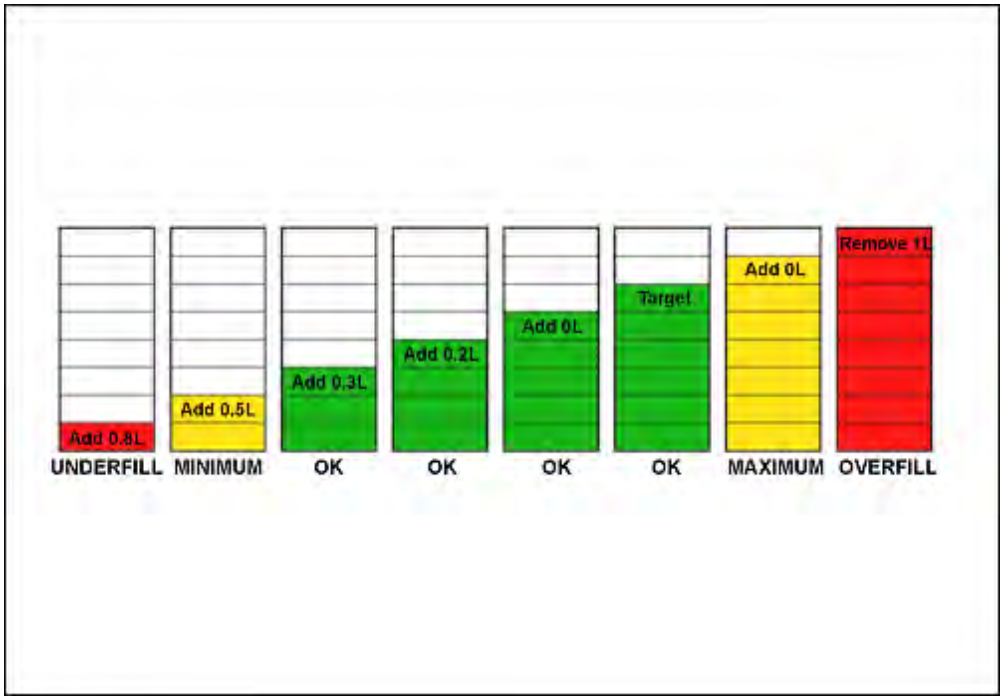

Instructions

DANGER!

Risk of death working with lifting platforms!
Care must be taken while working with the lifting platform. Death may occur if a vehicle slips or topples off the lifting platform.
Position the support plates on the lifting platform support points at the same height.

- Raise the vehicle a few inches first (wheels are still touching the ground) and check the position and fit of the support plates and lift points before raising the vehicle to the full lifted position.
- Do not raise the vehicle off the lifting platform plates when components are being supported.
- Centre the vehicle lengthwise and crosswise between the lifting platform columns.
- Comply with all relevant statutory and accident prevention regulations.

Lift vehicle

Care Point: Ensure vehicle is in correct orientation to allow door opening.

Care Point: Ensure lifting arm pads do not obstruct removal of floor panels.

1. Carefully position lifting arms on jacking points (1).
2. Raise vehicle.

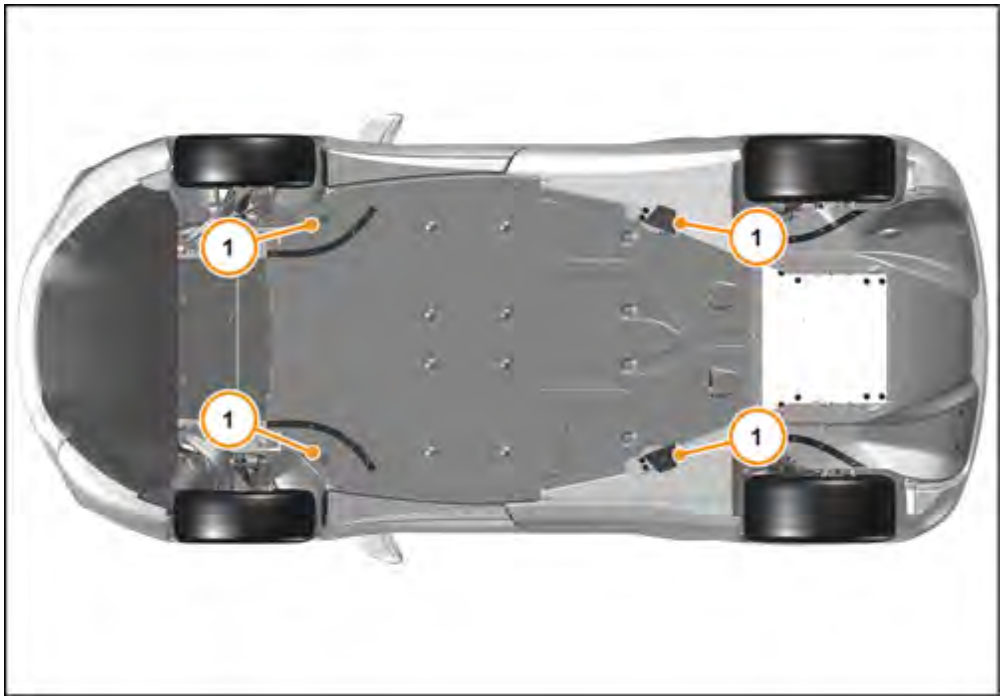

Instructions

FG03 Chassis / B03 Wheels Tyres / Wheel Assembly / AA-RM-03B03-01-001 - Remove/install wheel

Preparation work

1. AA-RM-02A04-04-007 Secure/lift vehicle on lifting platform

Remove wheel

1. Remove wheel bolts in sequence A - E. 130 Nm
2. Remove wheel (1).

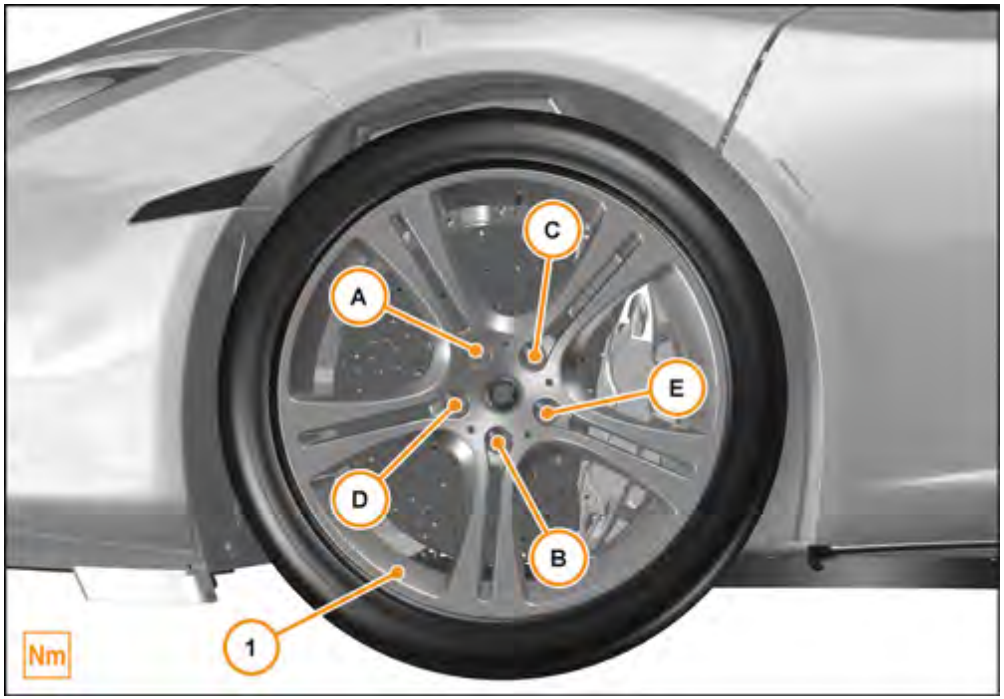

Install wheel

Care Point: Ensure that the tyres are in the correct orientation. All Pzero, all winter, and rear corsa tyres are asymmetric. Front corsa tyres are directional.

Care Point: Measure tread depth, check rim and tyre for any damage.

1. Install components in reverse order.

2. Check tyre pressure and correct, if necessary.

   Care Point: Once vehicle is on ground.

3. Apply pressure to top of wheel towards vehicle. If excessive inward movement of wheel is present, the upper ball joint has failed. The wishbone will require replacing.

Torque settings

FG03 Chassis / B03 Wheels Tyres / Wheel Assembly / AA-RM-03B03-01-001 - Remove/install wheel

Description	Dimension	Value
Bolt Wheel		130 Nm

nstructions

FG03 Chassis / C01 Brake System / Brake Discs Calipers Front / AA-RM-03C01-01-006 - Cleaning/ Checking carbon ceramic brake disc (CCM)/Iron brake disc (Fe)

Preparation work

1. AA-RM-02A04-04-007 Secure/lift vehicle on lifting platform

2. AA-RM-03B03-01-001 Remove/install wheels

3. AA-RM-03C01-01-002 Remove/install brake caliper - front

5. AA-RM-03C01-01-003 Remove/install brake - Disc - front

6. AA-RM-03C02-01-002 Remove/install caliper parking brake

7. AA-RM-03C01-03-001 Remove/install brake caliper - rear

9. AA-RM-03C01-03-002 Remove/install brake disc - rear

Cleaning/ Checking carbon ceramic brake disc (CCM)/Iron brake disc (Fe)

1. When carrying out this procedure the following safety equipment must be worn – dust mask, sleeve protection, and plastic gloves.

Care Point: Only pick up the disc from the bell housing. Do not handle from the ventilation channels.

Care Point: Cleaning of the discs, pads, and cross drilled holes must be carried out before replacement.

Care Point: It is important to keep all pads and discs free of dirt/ grease as these impurities can cause a loss of friction when braking.

Care Point: Do not under any circumstances soak brake discs/pads in solvent. Solvent must not be absorbed by the composite material.

Care Point: Pads and discs can only be cleaned with acetone solvents. Under no circumstances can standard brake cleaner be used.

Care Point: The use of a fine grade sand paper to lightly rub the surface is permissable.

Cleaning carbon ceramic brake disc (CCM)/Iron brake discs (Fe) and pads

1. Clean Iron brake discs (Fe) and pads.

Care Point: Do not machine cross drilled holes.

Care Point: Do not flare cross drilled holes.

Care Point: Do not carry out any form of grinding on the disc.

Care Point: Cleaning of the discs, pads, and cross drilled holes must be carried out before replacement.

Care Point: Only use screwdriver/ punch with a max diameter of 5mm to clean cross drilled holes.

Cleaning cross drilled holes

1. Use a screwdriver/ punch (A) to initially clear the cross drilled holes of composite build up.

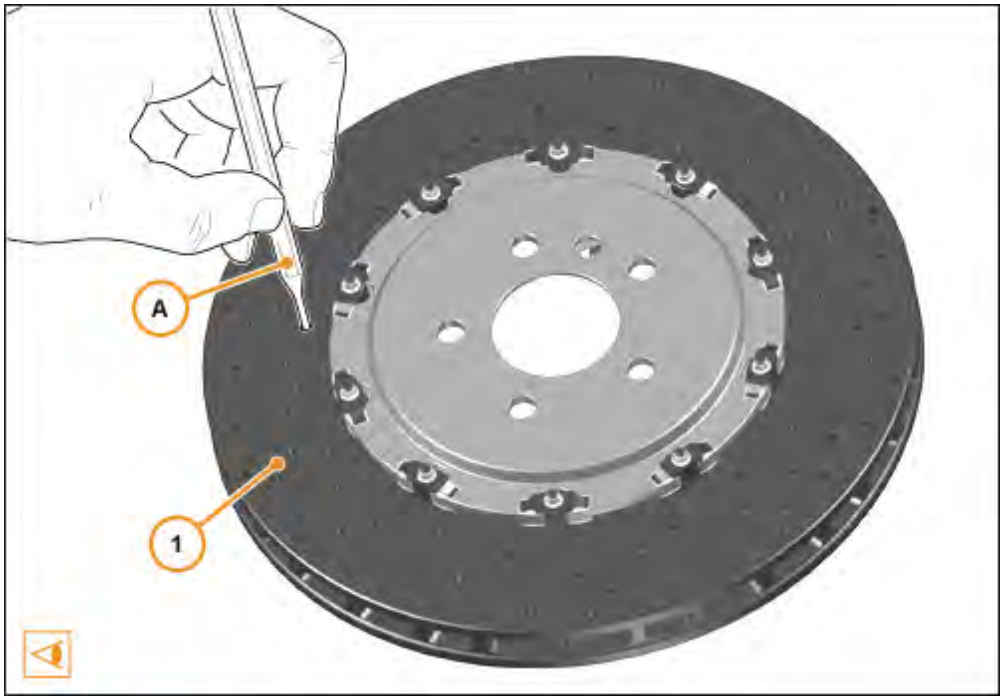

2. Once all holes are cleared, use a pressurised air gun (B) to clean out the final remnants of build up.

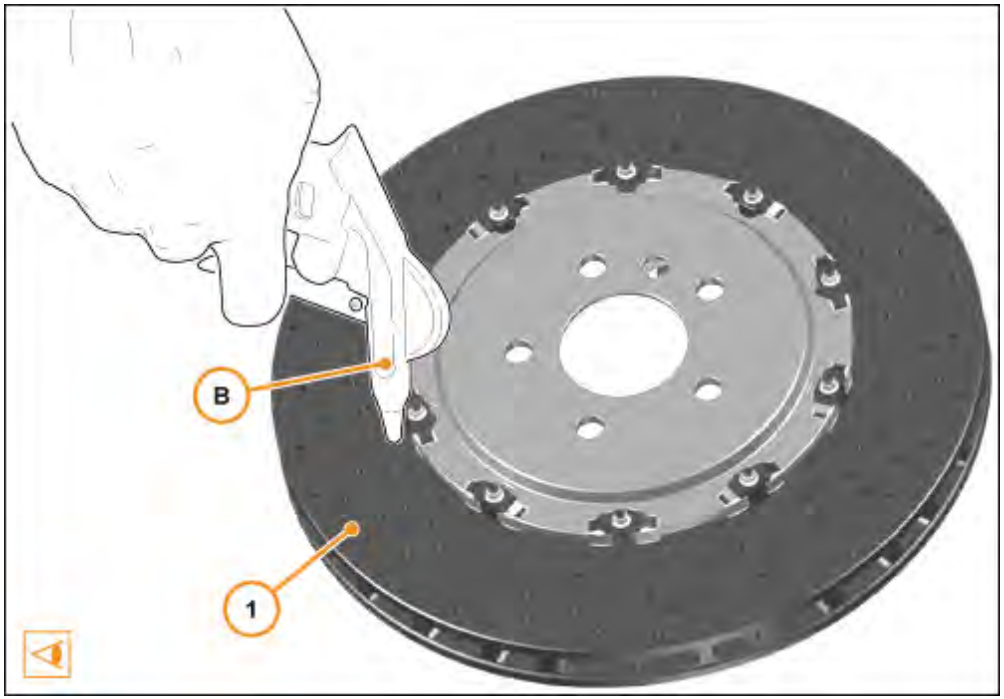

Disc replacement required

Care Point: Discs must be renewed in axle sets.

Care Point: The brake bedding procedure must be carried out whenever discs are renewed. This is to ensure a good mating condition between the pad and disc.

Care Point: When discs are renewed, pad wear must be checked. If pad wear has not reached 50%, they can be re-used if the brake bedding procedure is repeated. If this procedure is not observed, the disc may fail when sufficient pressure is applied when braking.

Care Point: **If any of the below conditions occur, the disc must be replaced regardless of the mileage covered by the vehicle**
1. The weight is within 20g of the minimum weight of the disc as stated on the bell or minimum thickness has been reached.
2. The comfort level of the disc has reached an unacceptable condition.
3. There has been an excessive drop in braking performance.
4. The disc has been subjected to accidental damage.
5. The disc face has been damaged due to 100% pad wear (metal to disc contact).
6. If the vehicle has been involved in an accident where a wheel face has been impacted.

For points 1, 2, and 3, these will occur to the brake discs through normal use over time.

Care Point: Please note that the CCM disc will only show signs of wear in two cases. These are if the vehicle has experienced hard use such as racing, or if the temperature experienced by the disc is greater than 500° C. In these situations, the composite within the discs will begin to oxidize, which leads to a more pronounced drop off in disc weight.

Care Point: If the vehicle is driven in an aggressive manner or experiences a lot of cornering, an increase in disc/pad wear will be experienced.

1. If required, replace disc.

Checking Iron brake disc – Visual inspection of surface/ wear

Care Point: Cracks will appear on the disc surface if it has been subjected to excessive thermal cycling.

1. If disc surface contains cracks originating from a cross drilled hole (1), it must not exceed 20mm in length. If crack is greater than this, disc must be replaced.

A	20mm
B	5mm

2. If disc surface contains cracks originating from a cross drilled hole that joins a crack from an adjacent hole (2), disc must be replaced.
3. If disc surface contains cracks that go within 5mm of the outer (3), or inner edge (3), disc must be replaced.

   Care Point: Differential wear must not exceed 0.5mm side to side.

4. Minimum disc thickness are 30mm (Front)/ 28mm (Rear).

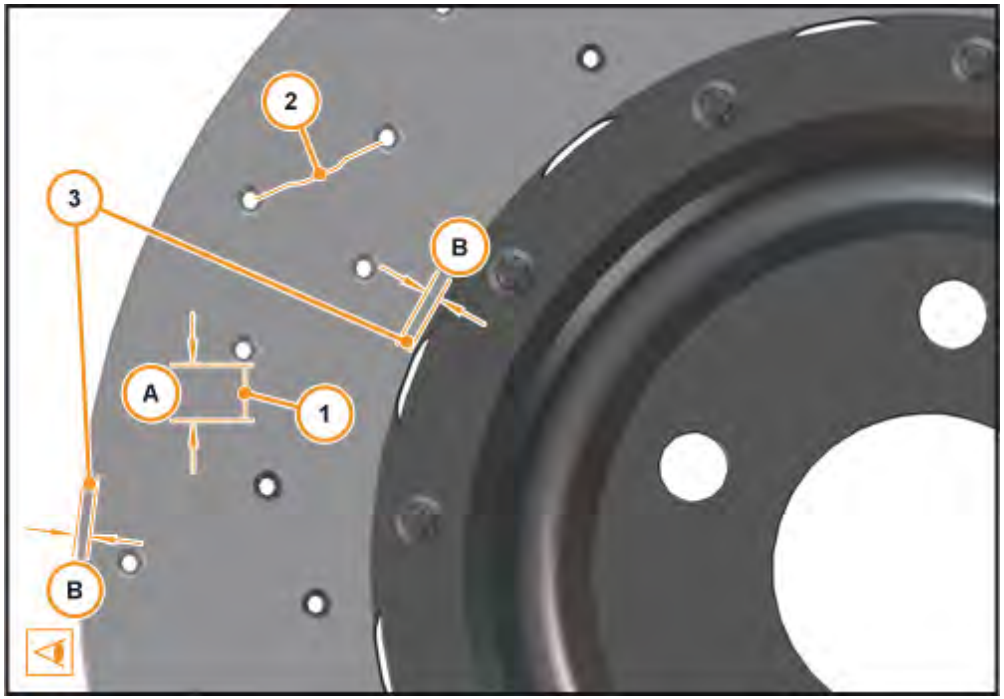

Care Point: Please note CCM discs do not lose performance once the braking surface shows indications of being worn, so may still be used.
On CCM discs, it is common for the braking surface to change visually during use. The change is caused by temperature variance between the face of the disc and the ventilation channels. Please note that this does not affect the performance of the disc.

Care Point: If cross drilled holes are blocked by CCM material, discs must be fully cleaned.

Checking carbon ceramic brake disc – Visual inspection of surface/ wear

Care Point: If there is a build up of CCM on the internal diameter of the disc (1), this is due to it having a higher wear rate at the inner part of the disc (1).

1. This condition (C) should be matched by the pad (2). Please note that this does not affect the performance of the disc (1).

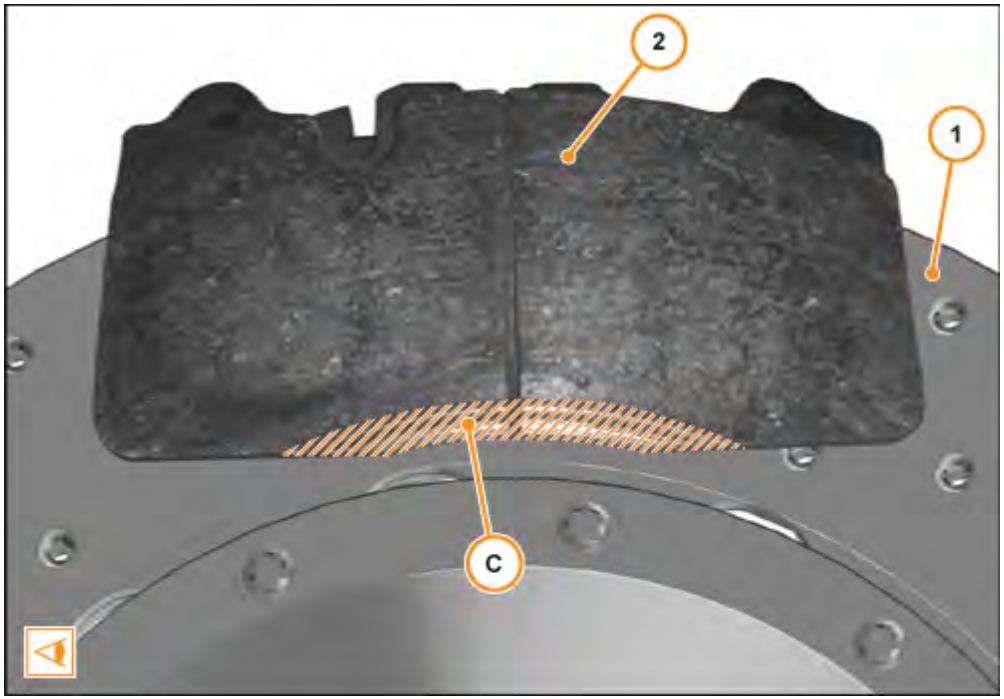

Care Point: Discs must be replaced if pad wear has reached 100%.
If pads have reached 100% wear, there is a high chance that the back plate has come into contact with the braking face (visible mark will be present).

2. Discs (1) must be replaced immediately if this circumstance has occurred due to contamination of the disc (1).

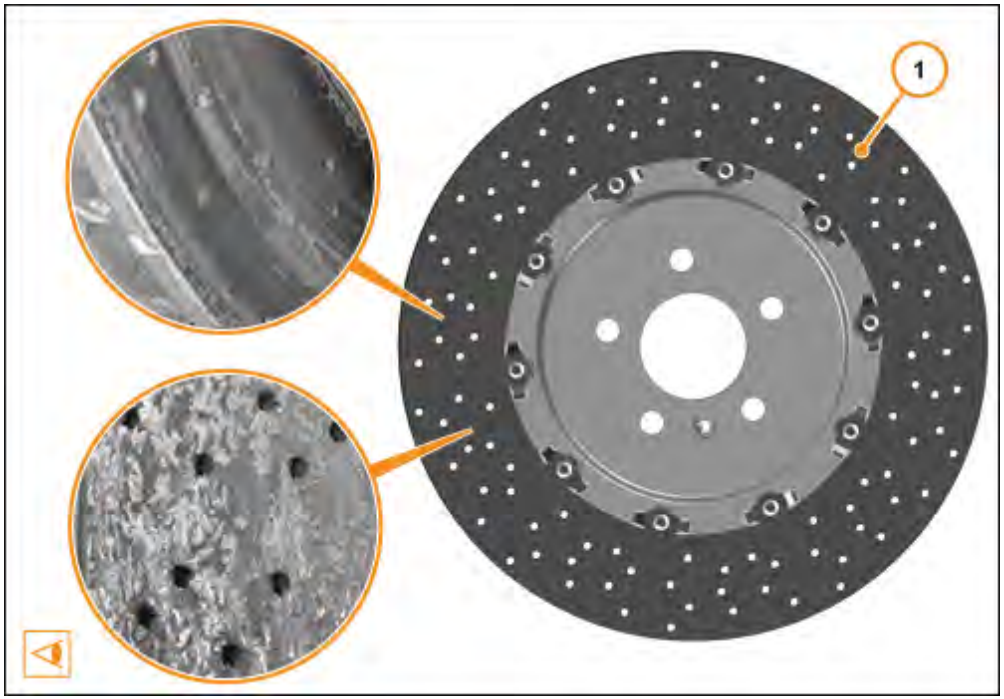

Care Point: Any visual change to the braking surface of the disc is caused when the fibres within the CCM experience a high level of thermal input. This then causes the fibres to oxidize, changing the surface appearance. This condition mainly occurs after extreme use, such as racing.
The oxidisation level is calculated by disc porosity and surface roughness. Areas that are mainly affected by the change in the braking surface are an increase in pad wear, decreased NVH, and a decrease in disc performance.
If the level of oxidisation experienced is very high, the disc must be replaced. See below for examples of the different levels of oxidisation experienced:

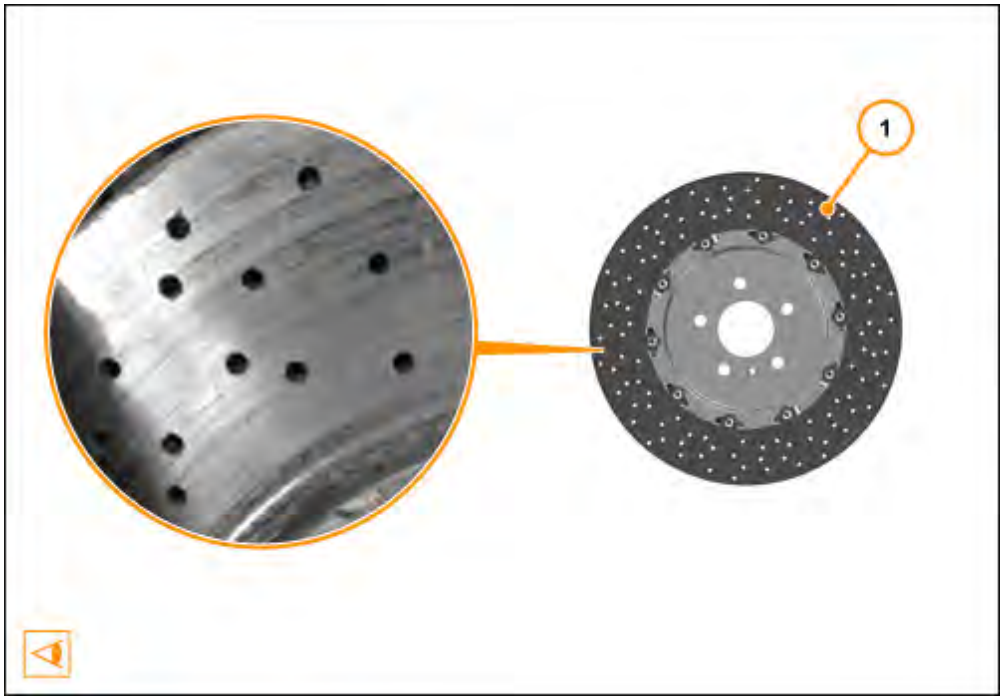

3. Disc surface (1) – Immediately after bedding – Do not renew.

4. Disc surface (1) – 200 km racing on track – Do not renew.

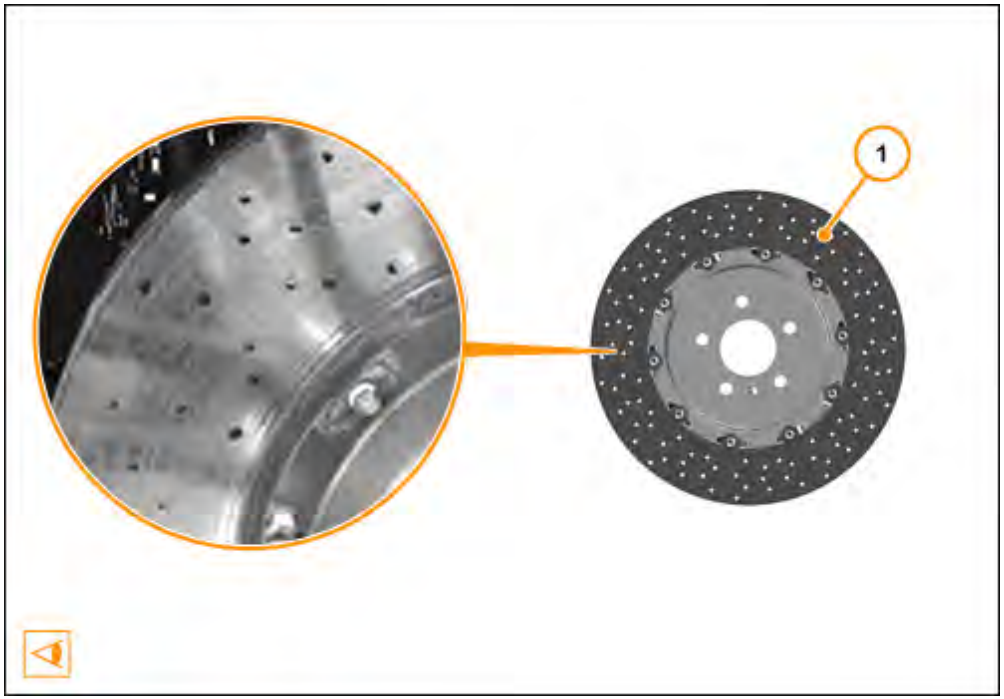

5. Disc surface (1) – 500 km racing on track – Do not renew.

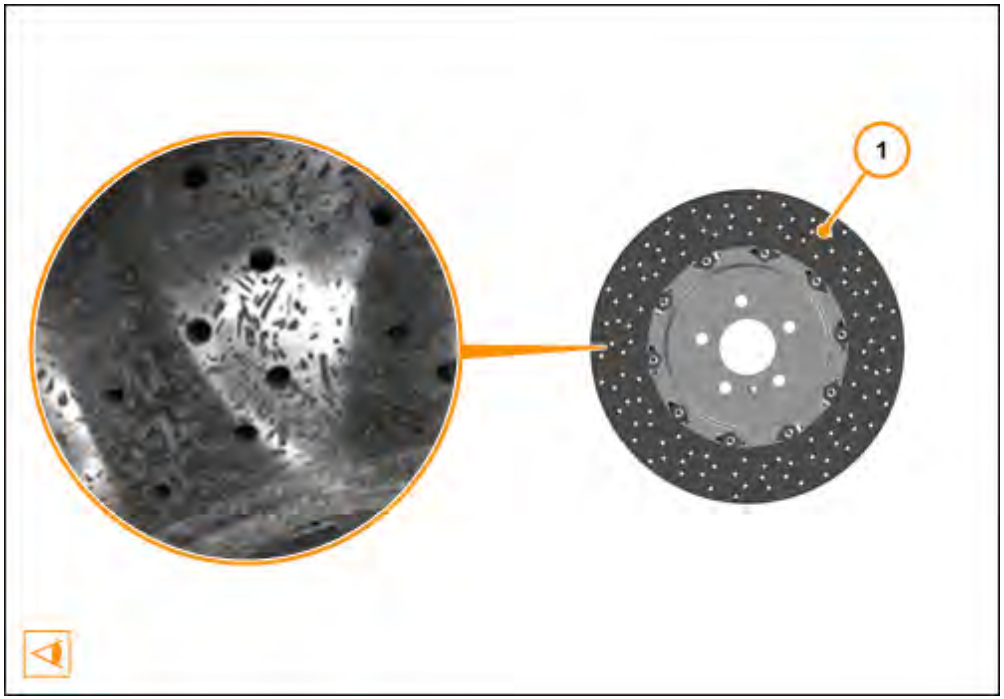

6. Disc surface (1) – 1000 km hard racing on track – Check disc weight.

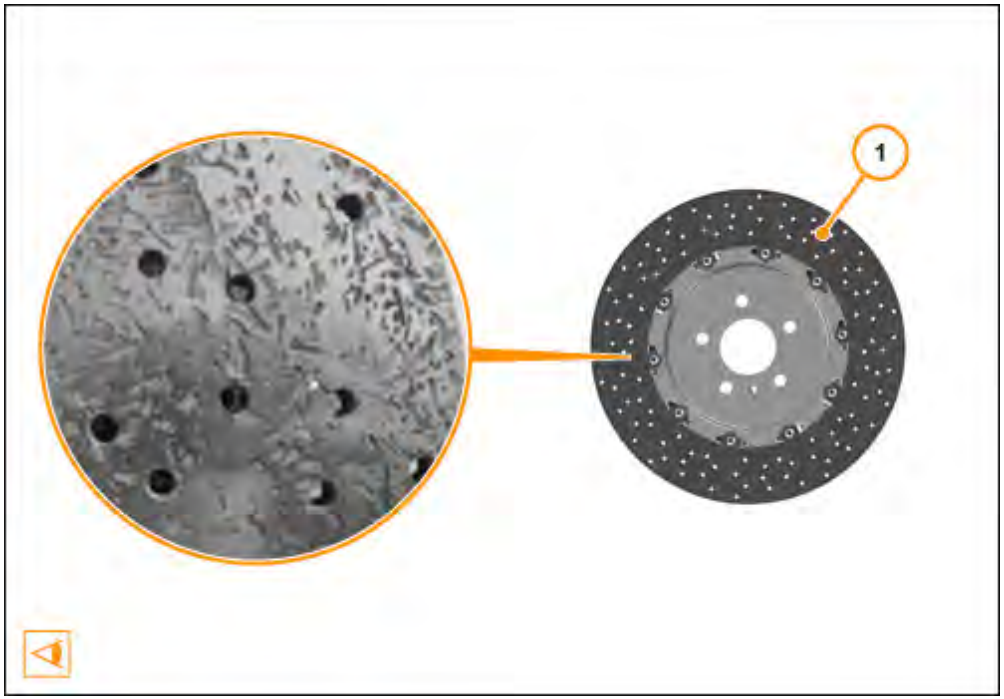

7. Disc surface (1) – 1500-2000 km racing on track – Renew disc (end of disc life).

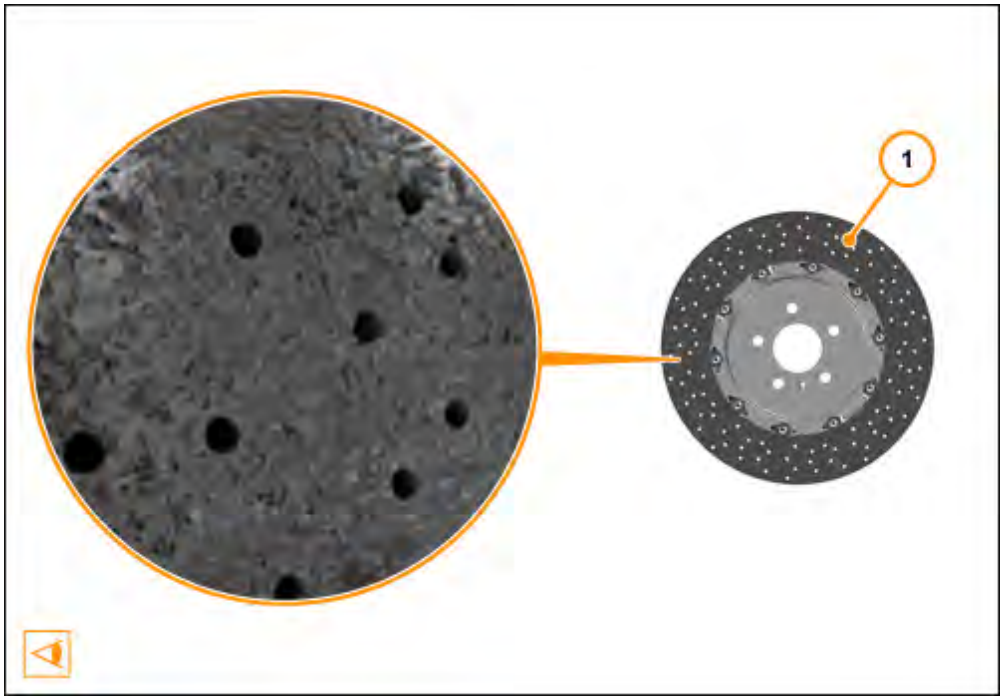

Care Point: Tool used when assessing damage must be a precision gauge with a tolerance of 0.1mm.

Care Point: If disc is damaged outside of specified figures along the edge of the braking surface, disc must be renewed.

Care Point: Any damage on the edge of the braking surface will not affect the disc weight due to the material density.

Checking CCM disc – Damage control specifications

1. If the CCM disc becomes damaged whilst handling due to being dropped or knocked, please use the following guidelines.

Width (E)	Maximum allowed 4 mm
Depth (D)	Maximum allowed 3 mm
Length (F)	Maximum allowed 20 mm
Chips	Maximum allowed 3 per disc
Projected area	Maximum area allowed 40 mm

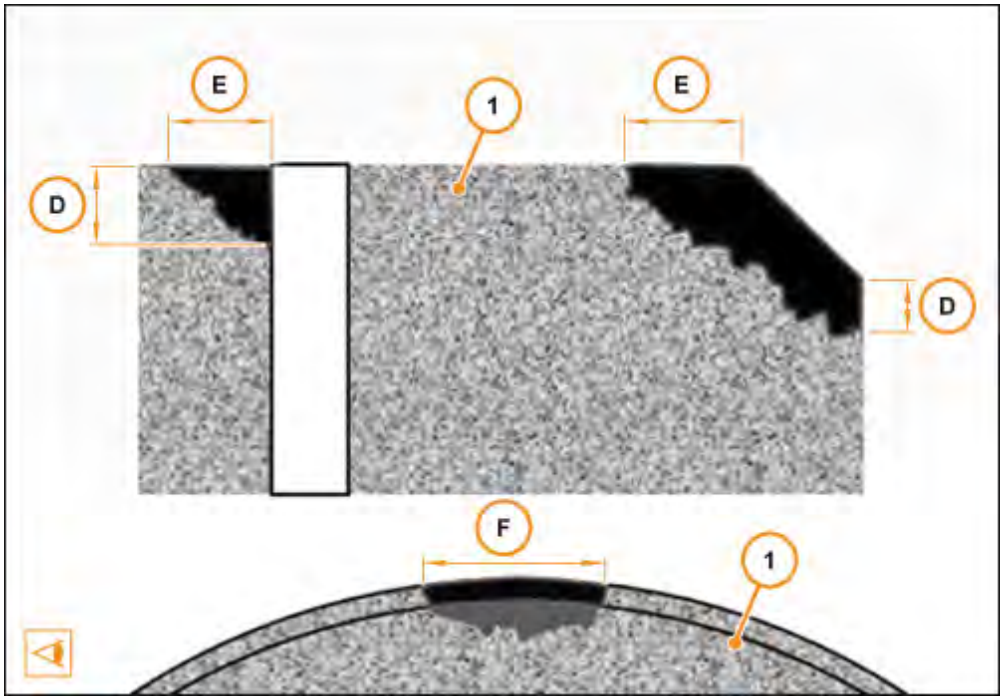

Care Point: See below examples of damage that may occur to a CCM disc (1), and the relevant action you should employ.

2. Disc Edge – Chip on used disc – Renew disc (1).

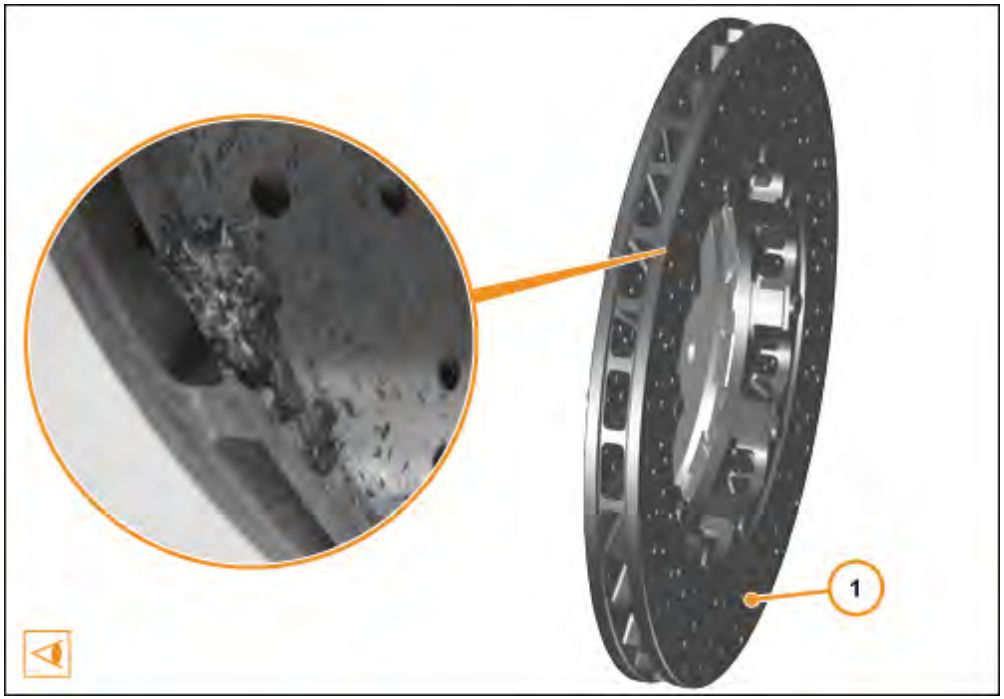

3. Disc Cross Drilled Hole – Chip on used disc – Renew disc (1).

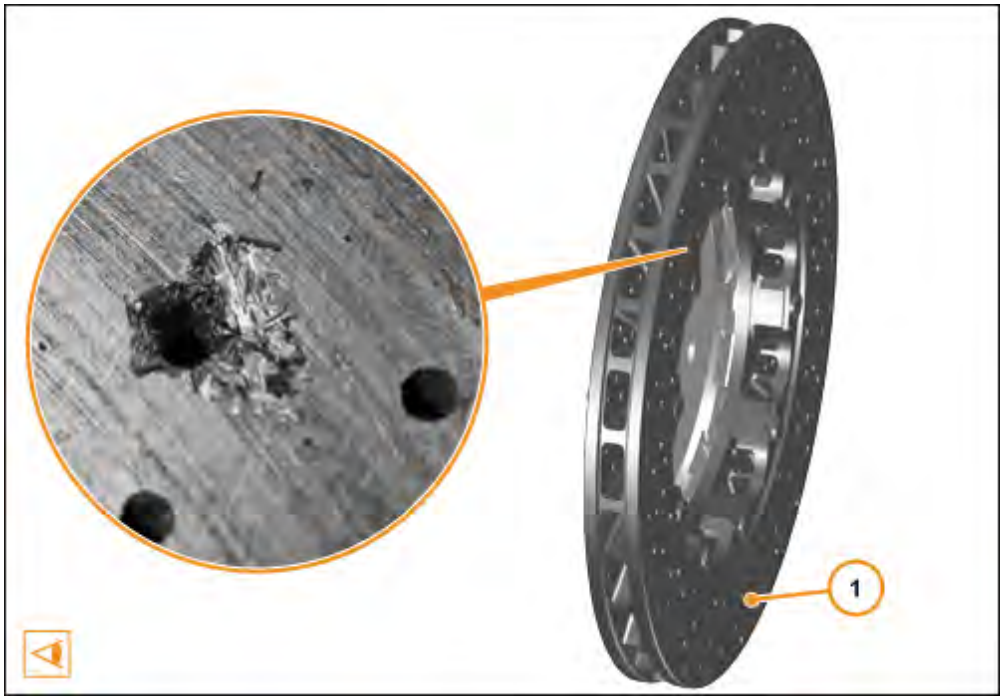

4. Disc Edge – Chip on disc – Do not renew disc (1).

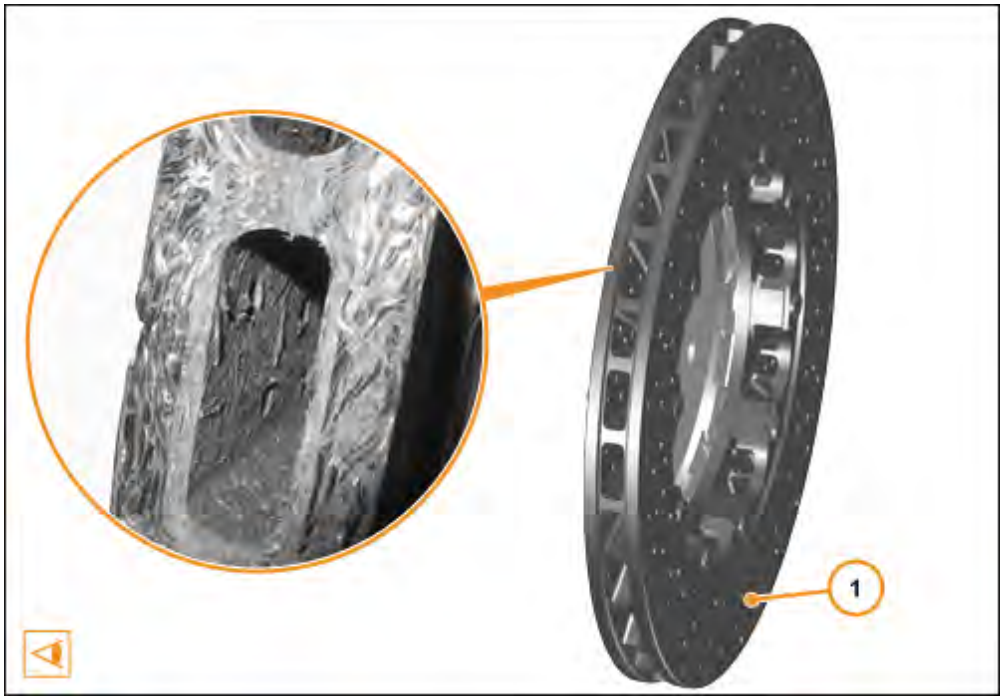

5. Disc Cross Drilled Hole – Chip on disc – Do not renew disc (1).

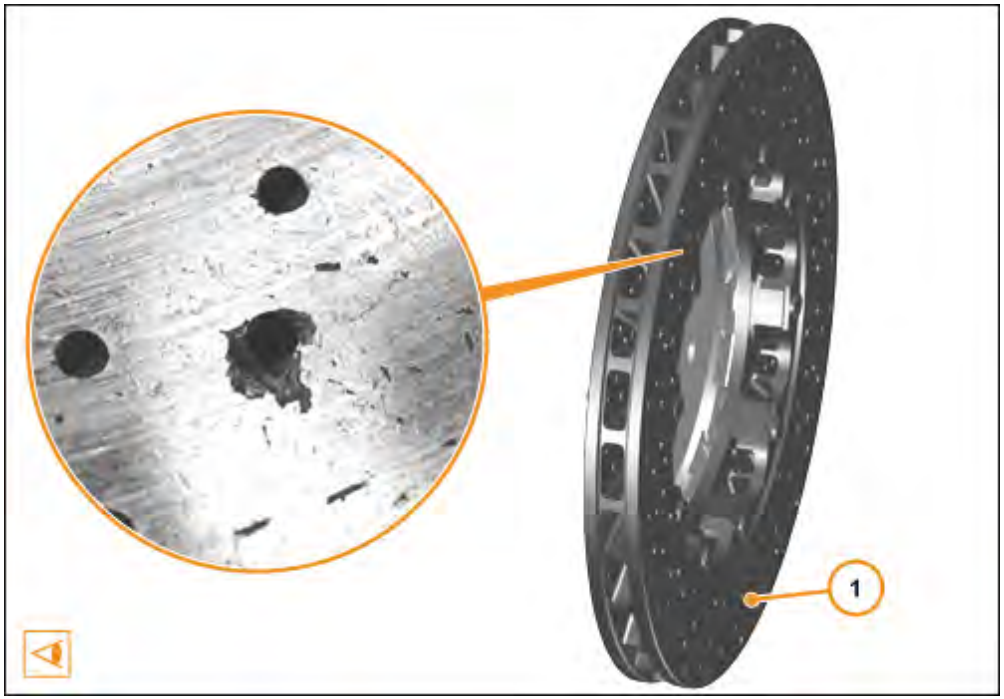

Care Point: If disc minimum weight is reached, renew discs as an axle set.
If disc reaches its maximum mileage, there will be no loss in performance but an increased risk of permanently damaging the disc.
At every service or replacement of pad, please make a note in the service manual of the disc weight (measured and residual) and mileage of the vehicle. From this information an estimation of disc life can be created.
Residual disc weight is calculated by subtracting the minimum disc weight from the measured disc weight.
Estimated disc life calculations are only suitable if the same type of usage has occurred between measurements.
If estimated disc life is very close to the mileage vehicle is currently on, recommendation is to change discs.
Disc thickness must always be measured from the base of the outer edge. Maximum wear limit for a CCM disc is the original disc thickness minus 0.5mm. If the difference is greater than 0.5 mm, renew disc.
The thickness change in a CCM disc does not provide a conclusive level of wear experienced. To get this information the disc must be weighed.
Before weighing the disc, it must be thoroughly cleaned including all cross drilled holes.
The disc must be dry and free of moisture, due to the porous nature of the CCM material.
Suitable and calibrated weighing scales must be used when carrying out this procedure.
Due to the fibres in the CCM disc oxidizing when subjected to extreme thermal pressure, the mass of the disc will be reduced. Because of this the CCM brakes must be weighed annually, every 15000 km, and before and after track use to ensure that they are still suitable for use.

Checking carbon ceramic brake disc (CCM)– Weight

Care Point: When weighing discs, ensure that the scales used have an accuracy range of +/- 2.5 grams.

1. Put disc on scales.

2. Register measured disc weight.

Care Point: If measured weight is within 20g, equal to, or less than the marked minimum weight, the disc must be renewed. Please ensure that discs are renewed in axle sets.

3. Check measured weight against marked minimum weight on disc bell (G).
4. To measure the estimated disc life using data recorded for mileage and residual disc weight, please use the following formula:

1st Service mileage (ODO1) = 15000km	Residual weight (R1) = 118g
2nd Service mileage (ODO2) = 25000km	Residual weight (R2) = 67g
Wear estimate (WE) = (R2 – R1) / (ODO2 – ODO1) WE = (67 – 118) / (25000 – 15000) WE = -51 / 10000 WE = -0.0051	
Estimated disc life (EDL) = ODO2 – (R2 / WE) EDL = 25000 – (67 / -0.0051) EDL = 25000 – (-13137) EDL = 38137km	

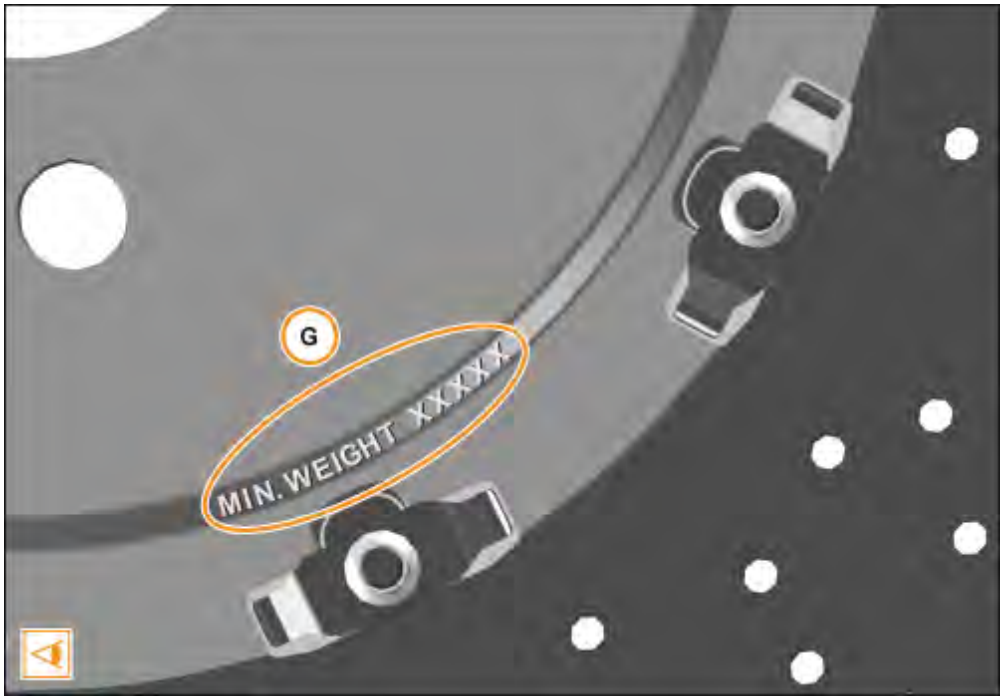

Instructions

FG03 Chassis / C01 Brake System / Brake Discs Calipers Front / AA-RM-03C01-01-001 - Remove/install brake pads - Front

Preparation work

1. AA-RM-02A04-04-007 Secure/lift vehicle on lifting platform.

2. AA-RM-03B03-01-001 Remove/install wheels.

Remove brake pads - Front

WARNING!

Risk of poisoning and injury when handling brake fluid!
Swallowing brake fluid can cause symptoms of poisoning such as headaches, dizziness, stomach pains, vomiting, diarrhoea, cramps and unconsciousness.
A dose of more than 100 cm3 can have fatal consequences.
Contact with brake fluid can cause serious skin damage to unprotected skin.
Wear safety glasses and protective clothing such as rubber gloves.

- Ensure that brake fluid is only accessible to authorized personnel.
- Store brake fluid in original containers only.
- Only store brake fluid in suitable, appropriately marked containers.
- Never put brake fluid in beverage containers.

1. Release brake fluid reservoir cap.

2. Disconnect brake pad wear indicator electrical connector.

3. Remove brake pad securing pins (1).

4. Remove bolt (2) and anti rattle clip. M10 x 38
   35 Nm
   Care Point: Use suitable grip.
   Protect caliper from damage.

5. Push caliper pistons back.

6. Remove brake pads (3).

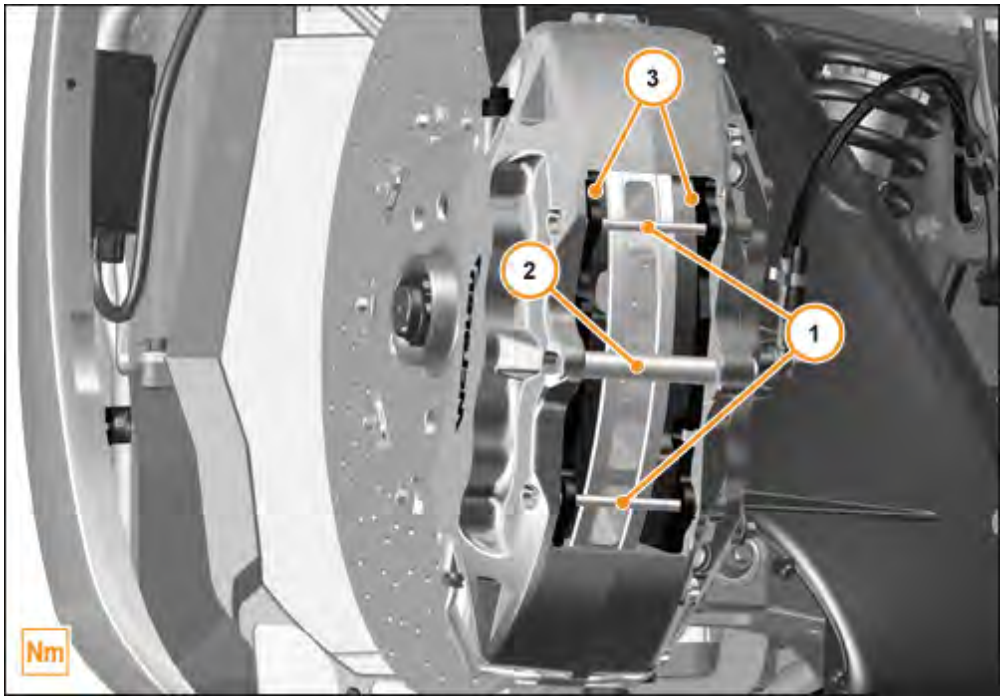

Install brake pads - Front

WARNING!

Risk of accident due to lack of braking effect!

When the brakes are used for the first time after any work was performed on the braking system's hydraulics area, the risk of an accident is increased due to an impaired braking effect.
Press the brake pedal several times to build up pressure in the brake system after finishing work on the braking system's hydraulics area and before starting the vehicle.

- Hold the brake pedal in a pressed down position for approximately 30 s once pressure has been built up in the brake system, the pressure in the brake system must not drop during this time.

Care Point: Ensure brake components are clean and free from dirt and debris.
Observe direction arrow on anti rattle clip.

Care Point: Ensure that the pad wear sensor and brake hose are secured with P-clips positioned perpendicular to the brake disc.

Care Point: If iron brakes are fitted to vehicle, proceed to step 2.

1. If carbon ceramic brakes are fitted to vehicle, before re-installing brake pads the brake discs must be weighed and checked. AA-RM-03C01-01-006 - Cleaning/ Checking carbon ceramic brake disc (CCM)/Iron brake disc (Fe)
2. Install components in reverse order.

3. Apply the footbrake several times to ensure the brake pads are correctly seated.

WARNING!

Risk of poisoning and injury when handling brake fluid!
Swallowing brake fluid can cause symptoms of poisoning such as headaches, dizziness, stomach pains, vomiting, diarrhoea, cramps and unconsciousness.
A dose of more than 100 cm3 can have fatal consequences.
Contact with brake fluid can cause serious skin damage to unprotected skin.
Wear safety glasses and protective clothing such as rubber gloves.

- Ensure that brake fluid is only accessible to authorized personnel.
- Store brake fluid in original containers only.
- Only store brake fluid in suitable, appropriately marked containers.
- Never put brake fluid in beverage containers.

4. Check brake fluid level and refill, if necessary. AA-RM-03C01-01-005 Fill/bleed fluid - Brake system

5. If new brake pads/discs have been fitted, bed in the brakes. AA-RM-03C01-01-004 - Bedding new brake pads/discs

Torque settings

FG03 Chassis / C01 Brake System / Brake Discs Calipers Front / AA-RM-03C01-01-001 - Remove/install brake pads - Front

Description	Dimension	Value
Bolt Securing bolt brake pads/antirattle clip - Front	M10 x 38	35 Nm

Instructions

FG03 Chassis / C01 Brake System / Brake Discs Calipers Front / AA-RM-03C01-01-002 - Remove/install brake caliper - Front

Preparation work

1. AA-RM-02A04-04-007 Secure/lift vehicle on lifting platform.

2. AA-RM-03B03-01-001 Remove/install wheels.

Remove brake caliper - Front

WARNING!

Risk of poisoning and injury when handling brake fluid!
Swallowing brake fluid can cause symptoms of poisoning such as headaches, dizziness, stomach pains, vomiting, diarrhoea, cramps and unconsciousness.
A dose of more than 100 cm3 can have fatal consequences.
Contact with brake fluid can cause serious skin damage to unprotected skin.
Wear safety glasses and protective clothing such as rubber gloves.

- Ensure that brake fluid is only accessible to authorized personnel.
- Store brake fluid in original containers only.
- Only store brake fluid in suitable, appropriately marked containers.
- Never put brake fluid in beverage containers.

Care Point: Ensure brake fluid connections are clean and free from dirt and debris to avoid contamination.

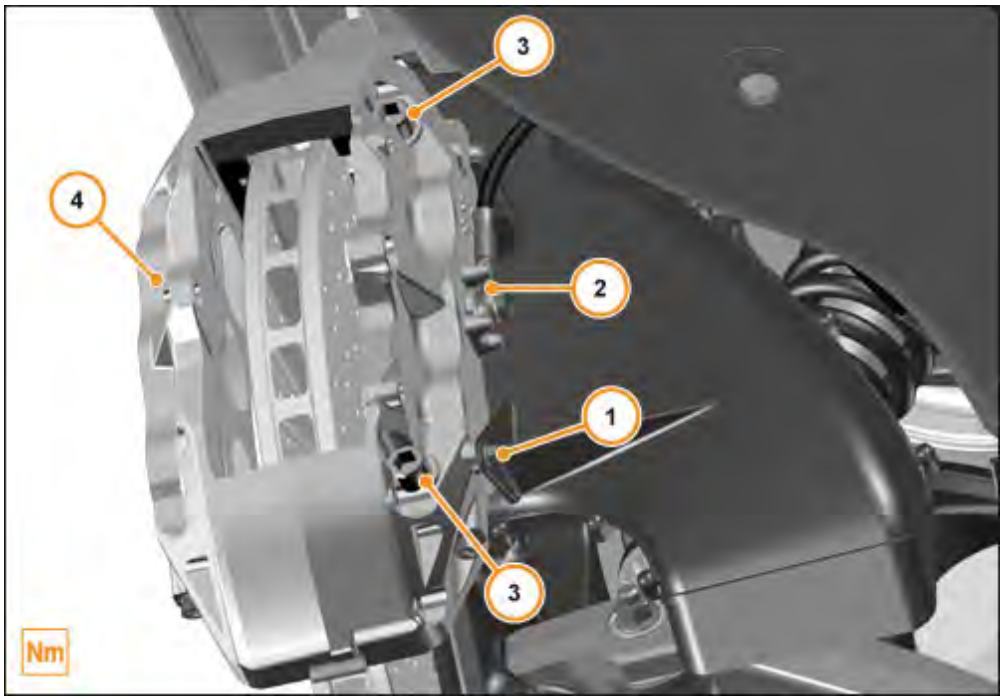

Care Point: Collect the brake fluid that emerges in a suitable container.

Care Point: Close off the brake line with a suitable plug.

1. Remove bolt (1). M5 x 12 5 Nm

Care Point: Replace Copper washers.

2. Remove banjo bolt (2). M10 42 Nm

3. Remove bolts (3). M12 x 85 93 Nm

4. Remove caliper (4).

Detach brake caliper - Front

Care Point: Ensure brake fluid connections are clean and free from dirt and debris to avoid contamination.

Care Point: Do not let caliper hang on brake hose.

1. Remove bolts (3). M12 x 85 93 Nm
2. Detach caliper (4) and hang in suitable location with cable tie.

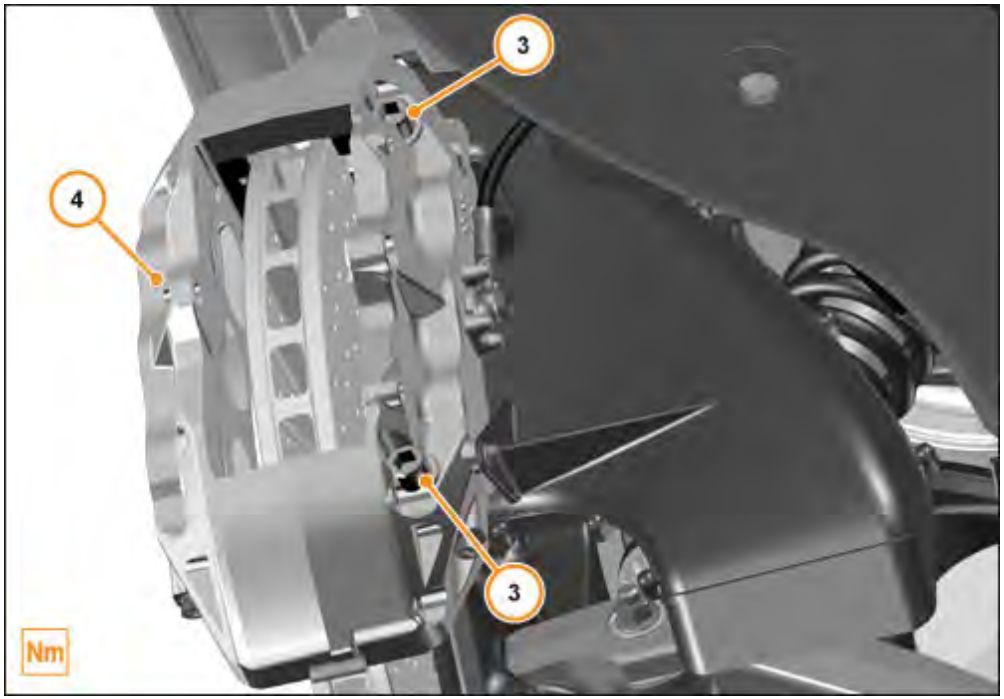

Install brake caliper - Front

WARNING!

Risk of accident due to lack of braking effect!

When the brakes are used for the first time after any work was performed on the braking system's hydraulics area, the risk of an accident is increased due to an impaired braking effect.

Press the brake pedal several times to build up pressure in the brake system after finishing work on the braking system's hydraulics area and before starting the vehicle.

- Hold the brake pedal in a pressed down position for approximately 30 s once pressure has been built up in the brake system, the pressure in the brake system must not drop during this time.

Care Point: Replace O-Ring seals and copper washers.

Care Point: Ensure brake components are clean and free from dirt and debris.

Care Point: Always renew bolts.

Care Point: Ensure that the pad wear sensor and brake hose are secured with P-clips positioned perpendicular to the brake disc.

Care Point: Where fitted, clean and apply loctite to disc cooling duct bolt. Loctite 243

1. Install components in reverse order.

2. Bleed brake system if necessary. AA-RM-03C01-01-005 Fill/bleed fluid - Brake system

Torque settings

FG03 Chassis / C01 Brake System / Brake Discs Calipers Front / AA-RM-03C01-01-002 - Remove/install brake caliper - Front

Description	Dimension	Value
Bolt cooling duct - brake caliper	M5 x 12	5 Nm

Banjo bolt Brake hose - Caliper	M10	42 Nm
Bolt Caliper	M12 x 85	93 Nm
Bolt Caliper	M12 x 85	93 Nm

Instructions

FG03 Chassis / C01 Brake System / Brake Discs Calipers Front / AA-RM-03C01-01-003 - Remove/Install brake disc - Front

Preparation work

1. AA-RM-02A04-04-007 Secure/lift vehicle on lifting platform

2. AA-RM-03B03-01-001 Remove/install wheels

3. AA-RM-03C01-01-002 Remove/install brake caliper - Front

Remove brake disc - Front

1. Remove bolt (1). M6 x 15 10 Nm

2. Remove brake disc (2).

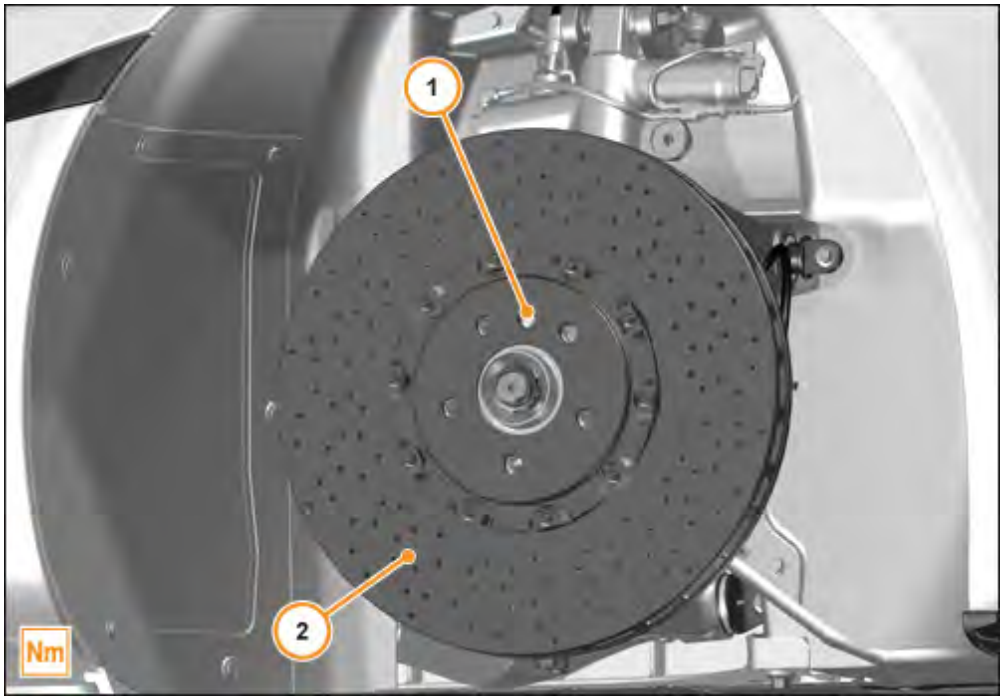

Install brake disc - Front

Care Point: Ensure all brake components are clean and free from dirt and debris.
When fitting new brake discs ensure a new brake pad axle set is fitted.

1. Install in reverse order.

2. Apply the footbrake several times to ensure the brake pads are correctly seated.

⚠WARNING!

Risk of poisoning and injury when handling brake fluid!
Swallowing brake fluid can cause symptoms of poisoning such as headaches, dizziness, stomach pains, vomiting, diarrhoea, cramps and unconsciousness.
A dose of more than 100 cm3 can have fatal consequences.
Contact with brake fluid can cause serious skin damage to unprotected skin.
Wear safety glasses and protective clothing such as rubber gloves.

- Ensure that brake fluid is only accessible to authorized personnel.
- Store brake fluid in original containers only.
- Only store brake fluid in suitable, appropriately marked containers.
- Never put brake fluid in beverage containers.

3. Check brake fluid level and refill, if necessary. AA-RM-03C01-01-005 Fill/bleed fluid - Brake system

⚠WARNING!

Risk of accident due to lack of braking effect!
When the brakes are used for the first time after any work was performed on the braking system's hydraulics area, the risk of an accident is increased due to an impaired braking effect.
Press the brake pedal several times to build up pressure in the brake system after finishing work on the braking system's hydraulics area and before starting the vehicle.

- Hold the brake pedal in a pressed down position for approximately 30 s once pressure has been built up in the brake system, the pressure in the brake system must not drop during this time.

4. If new brake pads/discs have been fitted, bed in the brakes. AA-RM-03C01-01-004 - Bedding new brake pads/discs

Torque settings

FG03 Chassis / C01 Brake System / Brake Discs Calipers Front / AA-RM-03C01-01-003 - Remove/Install brake disc - Front

Description	Dimension	Value
Bolt Brake disc - Hub	M6 x 15	10 Nm

Instructions

FG03 Chassis / C01 Brake System / Brake Front Pipes / AA-RM-03C01-02-001 Remove/Install brake hose - Front

Preparation work

1. AA-RM-02A04-04-007 Secure/lift vehicle on lifting platform

2. AA-RM-03B03-01-001 Remove/Install wheels

WARNING!

Risk of poisoning and injury when handling brake fluid!
Swallowing brake fluid can cause symptoms of poisoning such as headaches, dizziness, stomach pains, vomiting, diarrhoea, cramps and unconsciousness.
A dose of more than 100 cm3 can have fatal consequences.
Contact with brake fluid can cause serious skin damage to unprotected skin.
Wear safety glasses and protective clothing such as rubber gloves.

- Ensure that brake fluid is only accessible to authorized personnel.
- Store brake fluid in original containers only.
- Only store brake fluid in suitable, appropriately marked containers.
- Never put brake fluid in beverage containers.

Remove brake hose - Front

Care Point: Use a suitable container to catch the excess fluid.

Care Point: Close off the caliper with a suitable plug.

1. Remove banjo bolt (1) and Copper washer.
   M10 42 Nm

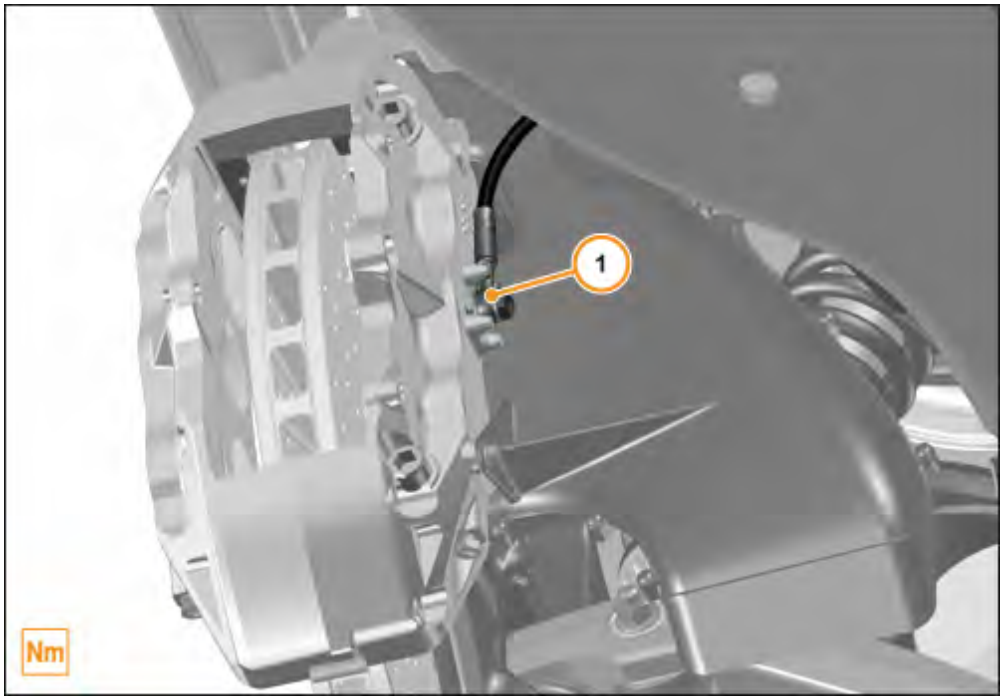

2. Detach union nut (2). M10 17 Nm

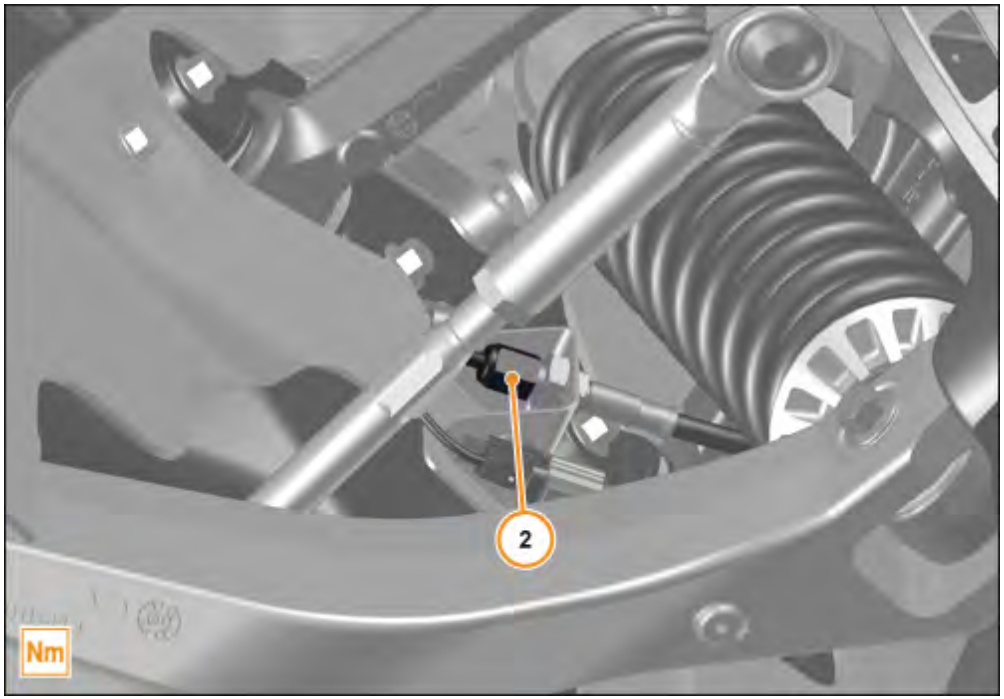

3. Loosen nut (3).
4. Remove front brake hose (4).

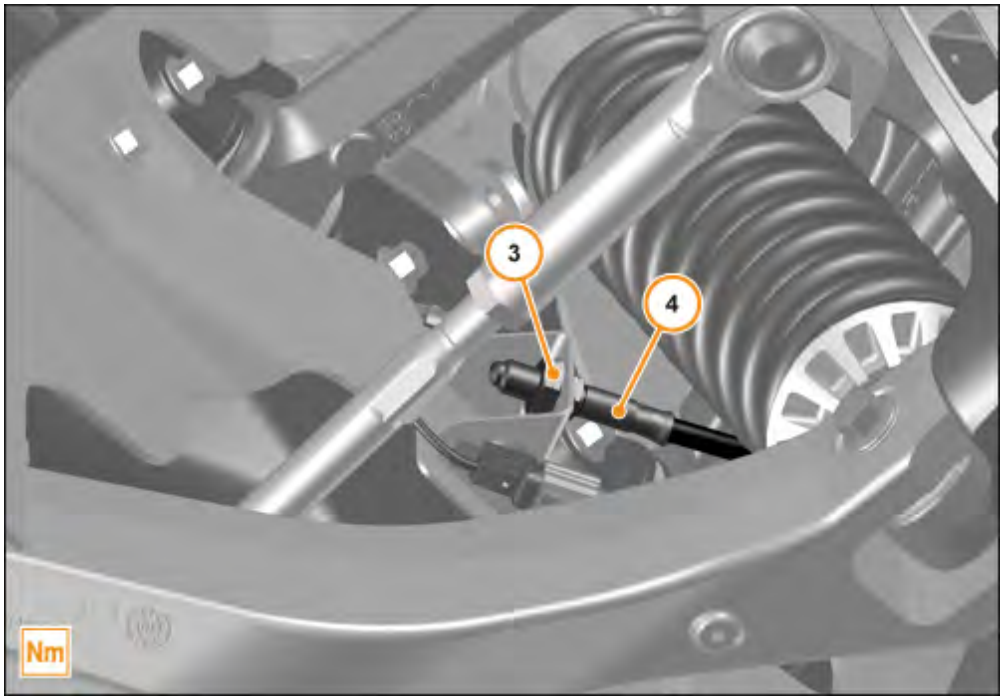

Install brake hose - Front

Care Point: Clean area around union.

Care Point: Replace Copper washers.

1. Install components in reverse order.
2. Bleed braking system. AA-RM-03C01-01-005 Fill/bleed fluid - Brake system

Torque settings

FG03 Chassis / C01 Brake System / Brake Front Pipes / AA-RM-03C01-02-001 Remove/Install brake hose - Front

Description	Dimension	Value
Banjo bolt Brake hose - Calliper	M10	42 Nm
Union nut Brake pipe - Brake hose	M10	17 Nm

Instructions

FG03 Chassis / C01 Brake System / Brake Discs Calipers Rear / AA-RM-03C01-03-003 - Remove/install brake pads - Rear

Preparation work

1. AA-RM-02A04-04-007 Secure/lift vehicle on lifting platform.

2. AA-RM-03B03-01-001 Remove/Install wheels.

Remove brake pads - Rear

WARNING!

Risk of poisoning and injury when handling brake fluid!
Swallowing brake fluid can cause symptoms of poisoning such as headaches, dizziness, stomach pains, vomiting, diarrhoea, cramps and unconsciousness.
A dose of more than 100 cm3 can have fatal consequences.
Contact with brake fluid can cause serious skin damage to unprotected skin.
Wear safety glasses and protective clothing such as rubber gloves.

- Ensure that brake fluid is only accessible to authorized personnel.
- Store brake fluid in original containers only.
- Only store brake fluid in suitable, appropriately marked containers.
- Never put brake fluid in beverage containers.

1. Release brake fluid reservoir cap.

2. Disconnect brake pad wear indicator electrical connector.

3. Remove brake pad securing pins (1) and anti rattle clip (2).

   Care Point: Use suitable grip.
   Protect caliper from damage.

4. Push caliper pistons back.

5. Remove brake pads (3).

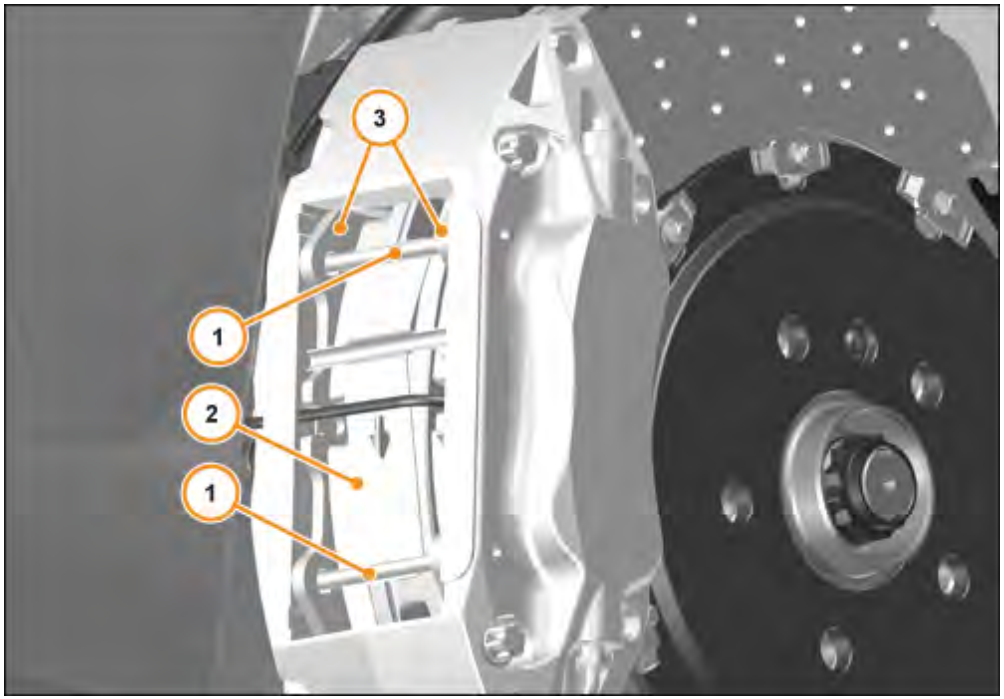

Install brake pads - Rear

WARNING!

Risk of accident due to lack of braking effect!

When the brakes are used for the first time after any work was performed on the braking system's hydraulics area, the risk of an accident is increased due to an impaired braking effect.
Press the brake pedal several times to build up pressure in the brake system after finishing work on the braking system's hydraulics area and before starting the vehicle.

- Hold the brake pedal in a pressed down position for approximately 30 s once pressure has been built up in the brake system, the pressure in the brake system must not drop during this time.

Care Point: Ensure brake components are clean and free from dirt and debris.
Observe direction arrow on anti rattle clip.

Care If iron brakes are fitted to vehicle, proceed to step 2.

Care Point: If iron brakes are fitted to vehicle, proceed to step 2.

1. If carbon ceramic brakes are fitted to vehicle, before re-installing brake pads the brake discs must be weighed and checked. AA-RM-03C01-01-006 - Cleaning/ Checking carbon ceramic brake disc (CCM)/Iron brake disc (Fe)
2. Install components in reverse order.

3. Apply the footbrake several times to ensure the brake pads are correctly seated.

WARNING!

Risk of poisoning and injury when handling brake fluid!
Swallowing brake fluid can cause symptoms of poisoning such as headaches, dizziness, stomach pains, vomiting, diarrhoea, cramps and unconsciousness.
A dose of more than 100 cm3 can have fatal consequences.
Contact with brake fluid can cause serious skin damage to unprotected skin.
Wear safety glasses and protective clothing such as rubber gloves.

- Ensure that brake fluid is only accessible to authorized personnel.
- Store brake fluid in original containers only.
- Only store brake fluid in suitable, appropriately marked containers.
- Never put brake fluid in beverage containers.

4. Check brake fluid level and refill, if necessary. AA-RM-03C01-01-005 Fill/bleed fluid - Brake system

5. If new brake pads/discs have been fitted, bed in the brakes. AA-RM-03C01-01-004 - Bedding new brake pads/discs

Instructions

FG03 Chassis / C01 Brake System / Brake Discs Calipers Rear / AA-RM-03C01-03-001 - Remove/install brake caliper - Rear

Preparation work

1. AA-RM-02A04-04-007 Secure/lift vehicle on lifting platform.

2. AA-RM-03B03-01-001 Remove/install wheels.

Remove brake caliper - Rear

WARNING!

Risk of poisoning and injury when handling brake fluid!
Swallowing brake fluid can cause symptoms of poisoning such as headaches, dizziness, stomach pains, vomiting, diarrhoea, cramps and unconsciousness.
A dose of more than 100 cm3 can have fatal consequences.
Contact with brake fluid can cause serious skin damage to unprotected skin.
Wear safety glasses and protective clothing such as rubber gloves.

- Ensure that brake fluid is only accessible to authorized personnel.
- Store brake fluid in original containers only.
- Only store brake fluid in suitable, appropriately marked containers.
- Never put brake fluid in beverage containers.

Care Point: Ensure brake fluid connections are clean and free from dirt and debris to avoid contamination.

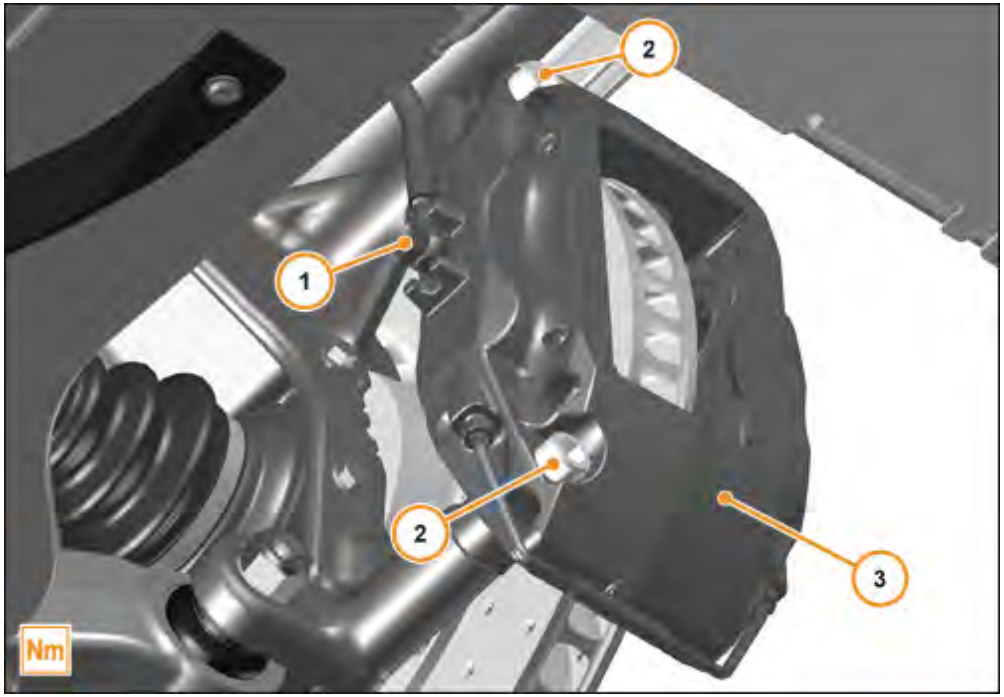

Care Point: Collect the brake fluid that emerges in a suitable container.

Care Point: Close off the brake line with a suitable plug.

Care Point: Replace Copper washers.

1. Remove banjo bolt (1). M10 42 Nm

2. Remove bolts (2).
   Carbon Ceramic (CCM): M12 x 85 93 Nm
   Iron (Fe): M12 x 66 70 Nm
3. Remove caliper (3).

Detach brake caliper - Rear

Care Point: Ensure brake fluid connections are clean and free from dirt and debris to avoid contamination.

Care Point: Do not let caliper hang on brake hose.

1. Remove bolts (2). M12 x 85 93 Nm

Care Point: Ensure the caliper in a suitable position with cable ties.

2. Detach caliper and hang in suitable location with cable tie (3).

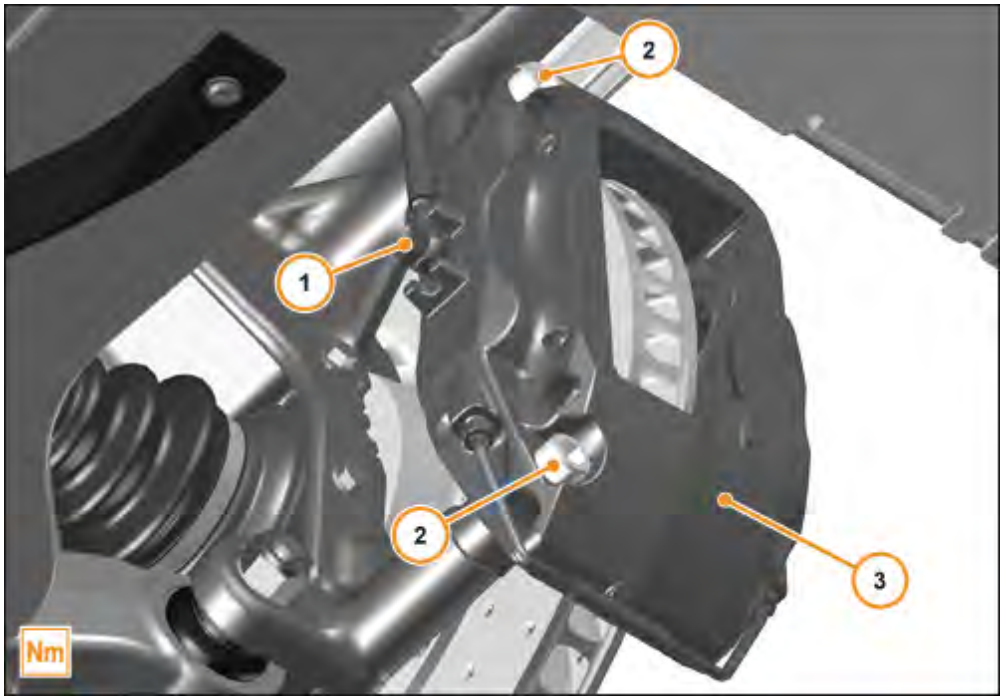

Install brake caliper - Rear

WARNING!

Risk of accident due to lack of braking effect!

When the brakes are used for the first time after any work was performed on the braking system's hydraulics area, the risk of an accident is increased due to an impaired braking effect.
Press the brake pedal several times to build up pressure in the brake system after finishing work on the braking system's hydraulics area and before starting the vehicle.

- Hold the brake pedal in a pressed down position for approximately 30 s once pressure has been built up in the brake system, the pressure in the brake system must not drop during this time.

Care Point: Replace O-Ring seals and copper washers.

Care Point: Ensure brake components are clean and free from dirt and debris.

Care Point: Always renew bolts.

1. Install components in reverse order.

2. Bleed brake system if necessary. AA-RM-03C01-01-005 Fill/bleed fluid - Brake system

Torque settings

FG03 Chassis / C01 Brake System / Brake Discs Calipers Rear / AA-RM-03C01-03-001 - Remove/install brake caliper - Rear

Description	Dimension	Value
Banjo bolt Brake hose - Caliper	M10	42 Nm
Bolt Caliper (Carbon Ceramic Version)	M12 x 85	93 Nm
Bolt Caliper (Iron Version)	M12 x 66	70 Nm
Bolt Caliper	M12 x 85	93 Nm

Instructions

Preparation work

1. AA-RM-02A04-04-007 Secure/lift vehicle on lifting platform
2. AA-RM-03B03-01-001 Remove/install wheels
3. AA-RM-03C02-01-002 Remove/install caliper parking brake
4. AA-RM-03C01-03-001 Remove/install brake caliper - rear

Remove brake disc - Rear

Care Point: The Electronic parking brake in inoperative when this sequence is carried out.

Care Point: Before mechanical work on Parking Brake components you must set calipers in fully open position.

1. Connect McLaren Diagnostic System, proceed to Diagnostic Toolbox within **Electronic parking brake (EPB)**.
2. Access Sequences section.
3. Carry out EPB Caliper Open.

4. Remove bolt (1). M6 x 15 10 Nm

5. Remove brake disc (2).

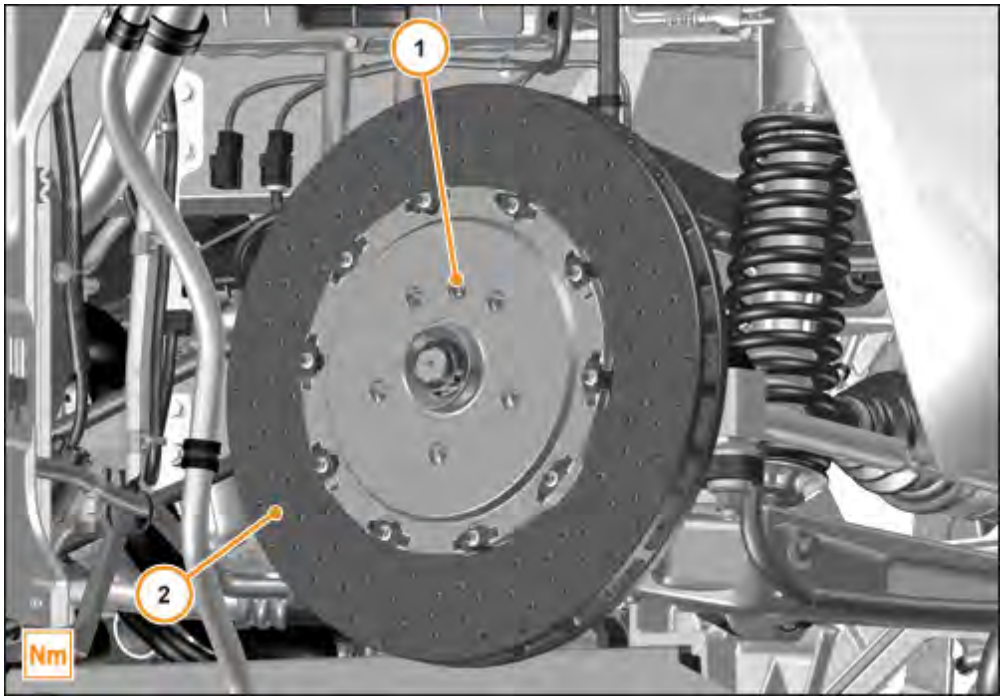

Install brake disc - Rear

Care Point: Ensure all brake components are clean and free from dirt and debris.
When fitting new brake discs ensure a new brake pad axle set is fitted.

1. Install in reverse order.

2. Apply the footbrake several times to ensure the brake pads are correctly seated.

WARNING!

Risk of poisoning and injury when handling brake fluid!
Swallowing brake fluid can cause symptoms of poisoning such as headaches, dizziness, stomach pains, vomiting, diarrhoea, cramps and unconsciousness.
A dose of more than 100 cm3 can have fatal consequences.
Contact with brake fluid can cause serious skin damage to unprotected skin.
Wear safety glasses and protective clothing such as rubber gloves.

Wear safety glasses and protective clothing such as rubber gloves.

- Ensure that brake fluid is only accessible to authorized personnel.
- Store brake fluid in original containers only.
- Only store brake fluid in suitable, appropriately marked containers.
- Never put brake fluid in beverage containers.

3. Check brake fluid level and refill, if necessary. AA-RM-03C01-01-005 Fill/bleed fluid - Brake system

WARNING!

Risk of accident due to lack of braking effect!
When the brakes are used for the first time after any work was performed on the braking system's hydraulics area, the risk of an accident is increased due to an impaired braking effect.
Press the brake pedal several times to build up pressure in the brake system after finishing work on the braking system's hydraulics area and before starting the vehicle.

- Hold the brake pedal in a pressed down position for approximately 30 s once pressure has been built up in the brake system, the pressure in the brake system must not drop during this time.

4. If new brake pads/discs have been fitted, bed in the brakes. AA-RM-03C01-01-004 - Bedding new brake pads/discs

WARNING!

Risk of injury from moving parts!
When working on components which can be moved either by hand, by means of electric motors, or hydraulically/ pneumatically via linkage, serious injuries can occur to body parts being trapped, crushed or severed.
Monitor hazard area.

- Secure area against unauthorised access when parts are in motion.
- Never touch the mechanism of a component while it is being actuated.
- Choose a test cable of sufficient length.

Care Point: After mechanical work on Parking Brake components you must set calipers in fully closed position.

Care The Parking Brake will be applied ensure it is safe to proceed with this sequence.

Point:

5. Connect McLaren Diagnostic System, proceed to Diagnostic Toolbox within **Electronic parking brake (EPB)**.
6. Access Sequences section.
7. Carry out EBP caliper Closed.
8. Carry out EBP Assembly Check.

Torque settings

FG03 Chassis / C01 Brake System / Brake Discs Calipers Rear / AA-RM-03C01-03-002 - Remove/install brake disc - Rear

Description	Dimension	Value
Bolt Brake disc - Hub	M6 x 15	10 Nm

Instructions

FG03 Chassis / C01 Brake System / Brake Rear Pipes / AA-RM-03C01-04-001 Remove/install brake hose - Rear

Preparation work

1. AA-RM-02A04-04-007 Secure/lift vehicle on lifting platform

2. AA-RM-03B03-01-001 Remove/Install wheels

WARNING!

Risk of poisoning and injury when handling brake fluid!
Swallowing brake fluid can cause symptoms of poisoning such as headaches, dizziness, stomach pains, vomiting, diarrhoea, cramps and unconsciousness.
A dose of more than 100 cm3 can have fatal consequences.
Contact with brake fluid can cause serious skin damage to unprotected skin.
Wear safety glasses and protective clothing such as rubber gloves.

- Ensure that brake fluid is only accessible to authorized personnel.
- Store brake fluid in original containers only.
- Only store brake fluid in suitable, appropriately marked containers.
- Never put brake fluid in beverage containers.

Remove brake hose - Rear

Care Point: Use a suitable container to catch the excess fluid.

Care Point: Close off the caliper with a suitable plug.

1. Remove banjo bolt (1) and copper washer.
   M10 42 Nm

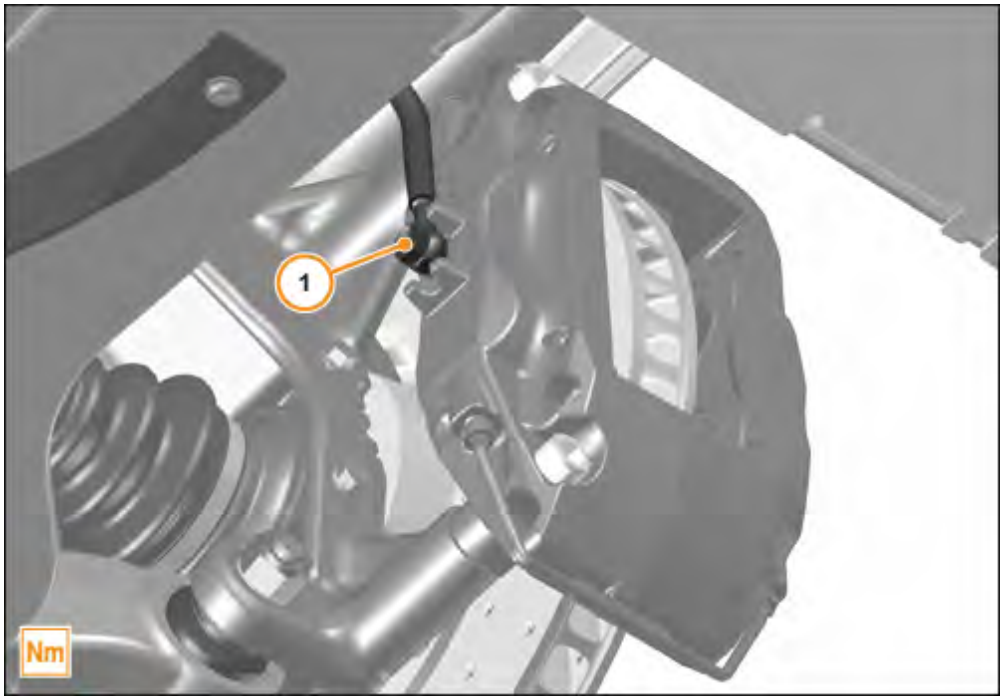

2. Detach union nut (2). M10 17 Nm

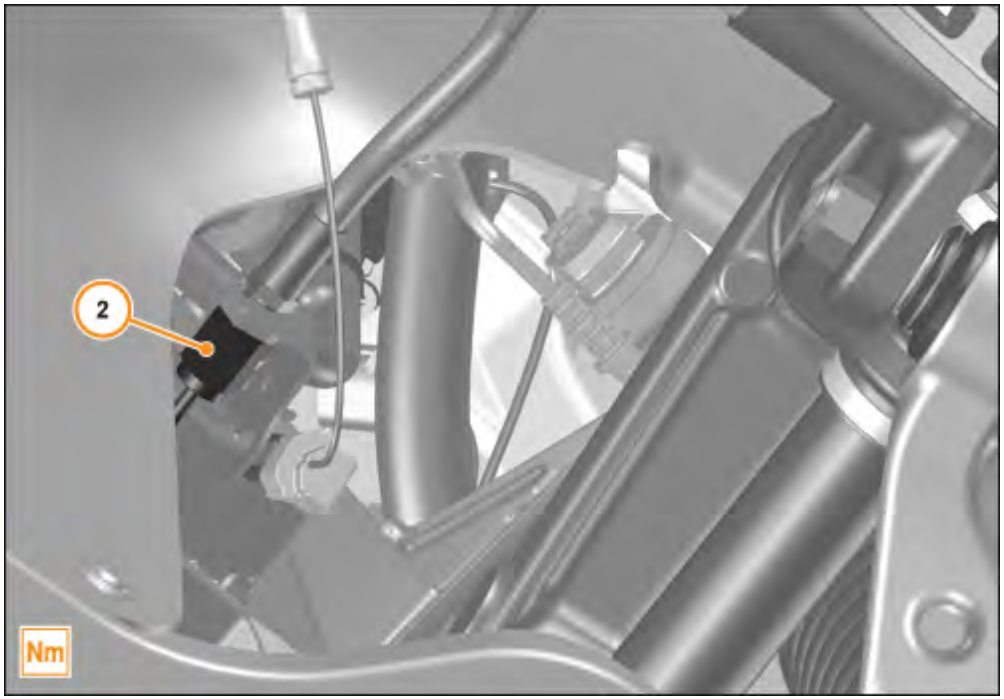

3. Loosen nut (3).

4. Remove rear brake hose (4).

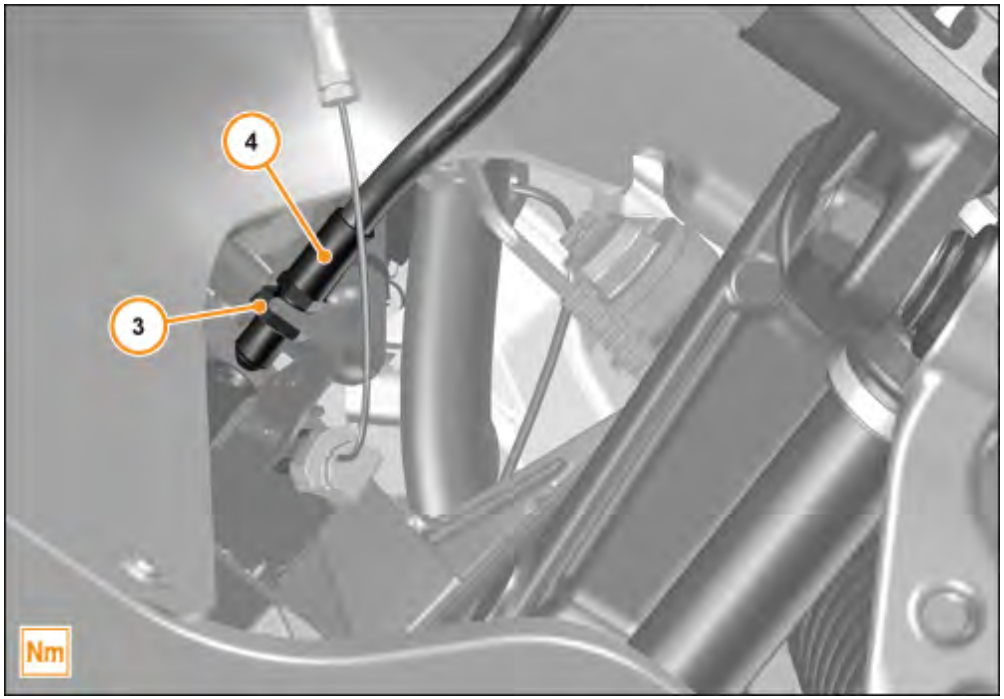

Install brake hose - Rear

Care Point: Clean area around union.

Care Point: Replace copper washer.

1. Install components in reverse order.

2. Bleed braking system. AA-RM-03C01-01-005 Fill/bleed fluid - Brake system

Torque settings

FG03 Chassis / C01 Brake System / Brake Rear Pipes / AA-RM-03C01-04-001 Remove/install brake hose - Rear

Description	Dimension	Value
Banjo bolt Brake hose - Calliper	M10	42 Nm
Union nut Brake pipe - Brake hose	M10	17 Nm

Instructions

FG03 Chassis / C02 Parking Brake System / Parking Brake System / AA-RM-03C02-01-001 - Remove/install pads - Electronic parking brake

Preparation work

1. AA-RM-02A04-04-007 Secure/lift vehicle on lifting platform.

2. AA-RM-03B03-01-001 Remove/install wheels.

Remove pads - Electronic parking brake

Care Point: The electronic parking brake is inoperative when this sequence is carried out.

Care Point: Before mechanical work on Parking Brake components you must set callipers in fully open position.

1. Connect McLaren Diagnostic System, proceed to Diagnostic Toolbox within **Electronic parking brake (EPB)**.
2. Access Sequences section.

3. Carry out EPB Calliper Open.

4. Remove pin securing clips (1).
5. Remove pad pins (2) and anti rattle clip (3).
6. Remove electronic parking brake pads.

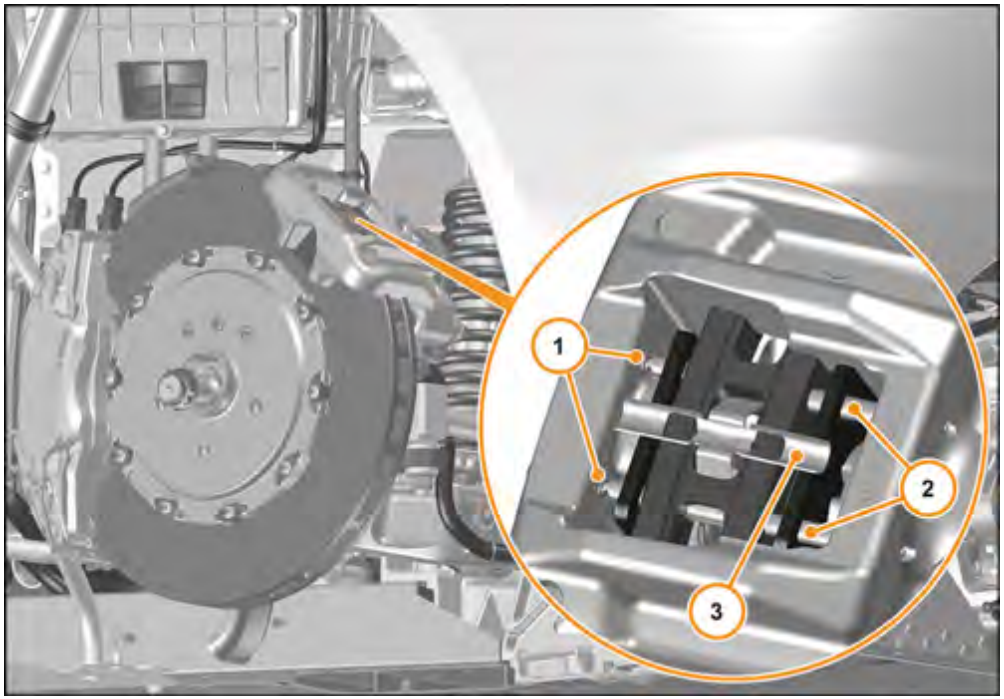

Install pads - Electronic parking brake

1. Clean all contact areas.

2. Install components in reverse order.

WARNING!

Risk of injury from moving parts!
When working on components which can be moved either by hand, by means of electric motors, or hydraulically/ pneumatically via linkage, serious injuries can occur to body parts being trapped, crushed or severed.
Monitor hazard area.

- Secure area against unauthorised access when parts are in motion.
- Never touch the mechanism of a component while it is being actuated.
- Choose a test cable of sufficient length.

Care Point: After mechanical work on Parking Brake components you must set callipers in fully closed position.

Care Point: The Parking Brake will be applied ensure it is safe to proceed with this sequence.

3. Connect McLaren Diagnostic System, proceed to Diagnostic Toolbox within **Electronic parking brake (EPB)**.

4. Access Sequences section.

5. Carry out EPB Calliper Closed.

6. Carry out EPB Assembly Check.

Instructions

FG03 Chassis / C02 Parking Brake System / Parking Brake System / AA-RM-03C02-01-003 - Remove/install electronic parking brake actuator

Preparation work

1. AA-RM-02A04-04-007 Secure/lift vehicle on lifting platform.

2. AA-RM-03B03-01-001 Remove/install wheels.

Remove electronic parking brake actuator

Care Point: The electronic parking brake is inoperative when this sequence is carried out.

Care Point: Before mechanical work on Parking Brake components you must set callipers in fully open position.

1. Connect McLaren Diagnostic System, proceed to Diagnostic Toolbox within **Electronic parking brake (EPB)**.
2. Access Sequences section.

3. Carry out EPB Calliper Open.

4. Disconnect electronic parking brake actuator electrical connector (1).
5. Remove bolts (2). M6 x 12 11 Nm

6. Remove electronic parking brake actuator (3).

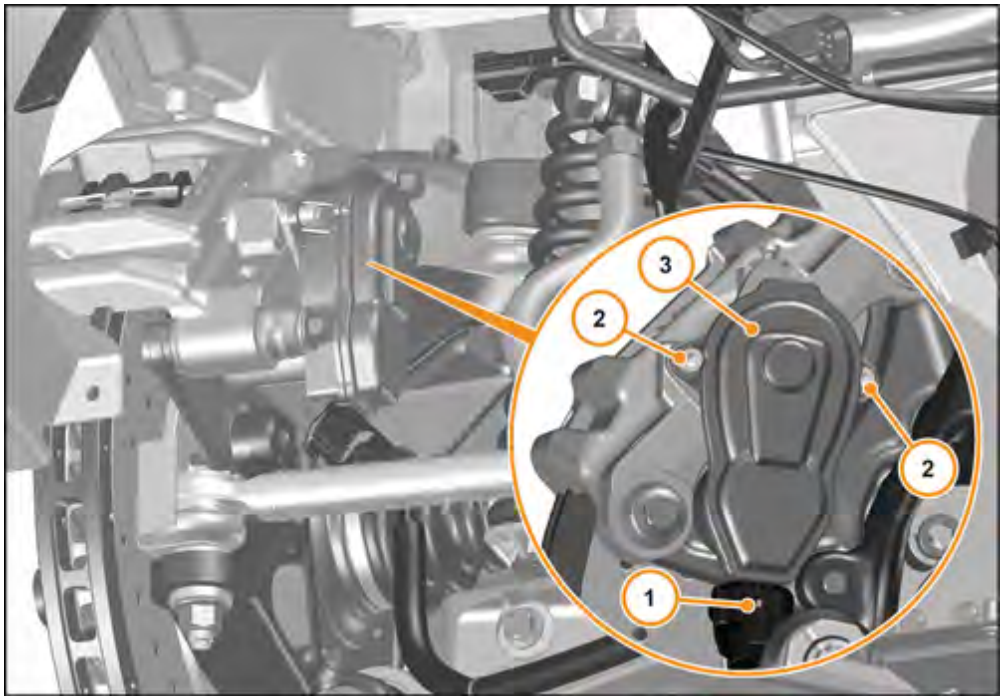

Install electronic parking brake actuator

Care Point: Conduct a pull test to ensure electronic parking brake actuator electrical connector is correctly fitted.

1. Install components in reverse order.

WARNING!

Risk of injury from moving parts!
When working on components which can be moved either by hand, by means of electric motors, or hydraulically/ pneumatically via linkage, serious injuries can occur to body parts being trapped, crushed or severed.
Monitor hazard area.

- Secure area against unauthorised access when parts are in motion.
- Never touch the mechanism of a component while it is being actuated.
- Choose a test cable of sufficient length.

Care Point: After mechanical work on Parking Brake components you must set callipers in fully closed position.

Care Point: The Parking Brake will be applied ensure it is safe to proceed with this sequence.

2. Connect McLaren Diagnostic System, proceed to Diagnostic Toolbox within **Electronic parking brake (EPB)**.
3. Access Sequences section.
4. Carry out EPB Calliper Closed.
5. Carry out EPB Assembly Check.

Torque settings

FG03 Chassis / C02 Parking Brake System / Parking Brake System / AA-RM-03C02-01-003 - Remove/install electronic parking brake actuator

Description	Dimension	Value
Bolt Electronic park brake actuator - caliper	M6 x 12	11 Nm

Instructions

Preparation work

1. AA-RM-02A04-04-007 Secure/lift vehicle on lifting platform.

2. AA-RM-03B03-01-001 Remove/install wheels.

WARNING!

Risk of injury from moving parts!
When working on components which can be moved either by hand, by means of electric motors, or hydraulically/pneumatically via linkage, serious injuries can occur to body parts being trapped, crushed or severed.
Monitor hazard area.

- Secure area against unauthorised access when parts are in motion.
- Never touch the mechanism of a component while it is being actuated.
- Choose a test cable of sufficient length.

Remove caliper - Electronic parking brake

Care Point: The electronic parking brake is inoperative when this sequence is carried out.

Care Point: Before mechanical work on Parking Brake components you must set calipers in fully open position.

1. Connect McLaren Diagnostic System, proceed to Diagnostic Toolbox within **Electronic parking brake (EPB)**.
2. Access Sequences section.

3. Carry out EPB caliper Open.

Care Point: Clean electrical connector before disconnection.
Do not use any hand tools to disconnect electrical connector.

4. Disconnect electronic parking brake actuator electrical connector (2).
5. Remove bolts (3). M10 x 85 33 Nm

6. Remove electronic parking brake caliper (1).

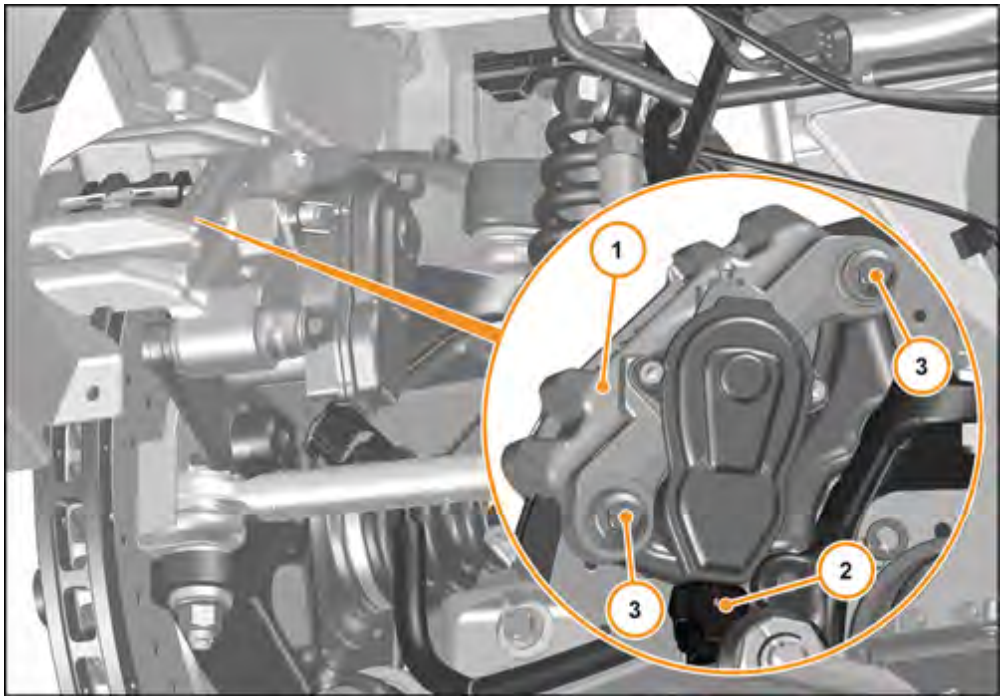

Install caliper - Electronic parking brake

Care Point: Ensure audible ‘click’ can be heard on connector installation.
Conduct a pull test to ensure electronic parking brake actuator electrical connector is correctly fitted.

Care Point: Clean and apply Loctite 2701 to 25mm of the caliper bolts, starting from end of the thread.

1. Install components in reverse order.

   Care Point: After mechanical work on Parking Brake components you must set calipers in fully closed position.

   Care Point: The Parking Brake will be applied ensure it is safe to proceed with this sequence.

2. Connect McLaren Diagnostic System, proceed to Diagnostic Toolbox within **Electronic parking brake (EPB)**.
3. Access Sequences section.
4. Carry out EPB caliper Closed.
5. Carry out EPB Assembly Check.

Torque settings

FG03 Chassis / C02 Parking Brake System / Parking Brake System / AA-RM-03C02-01-002 - Remove/install caliper - Electronic parking brake

Description	Dimension	Value
Bolt Electronic park brake caliper - upright	M10 x 85	33 Nm

Instructions

Preparation work

1. AA-RM-02A04-04-007 Secure/lift vehicle on lifting platform

2. AA-RM-03B03-01-001 Remove/install wheels

WARNING!

Risk of accident due to lack of braking effect!

When the brakes are used for the first time after any work was performed on the braking system's hydraulics area, the risk of an accident is increased due to an impaired braking effect.

Press the brake pedal several times to build up pressure in the brake system after finishing work on the braking system's hydraulics area and before starting the vehicle.

- Hold the brake pedal in a pressed down position for approximately 30 s once pressure has been built up in the brake system, the pressure in the brake system must not drop during this time.

WARNING!

Risk of poisoning and injury when handling brake fluid!

Swallowing brake fluid can cause symptoms of poisoning such as headaches, dizziness, stomach pains, vomiting, diarrhoea, cramps and unconsciousness.
A dose of more than 100 cm3 can have fatal consequences.
Contact with brake fluid can cause serious skin damage to unprotected skin.
Wear safety glasses and protective clothing such as rubber gloves.

- Ensure that brake fluid is only accessible to authorized personnel.
- Store brake fluid in original containers only.
- Only store brake fluid in suitable, appropriately marked containers.
- Never put brake fluid in beverage containers.

Fill/bleed fluid - Brake system

Care Point: The brake bleeding procedure is carried out using the MDS. The below steps reference the procedure stored on the MDS tool.

1 Connect MDS to vehicle.

2 Open brake reservoir cap (1).

Care Point: Tool must deliver 2.2 bar pressure (2) and have a minimum of 2 Litres of brake fluid to carry out procedure correctly.

3 Connect pressure bleeding tool.

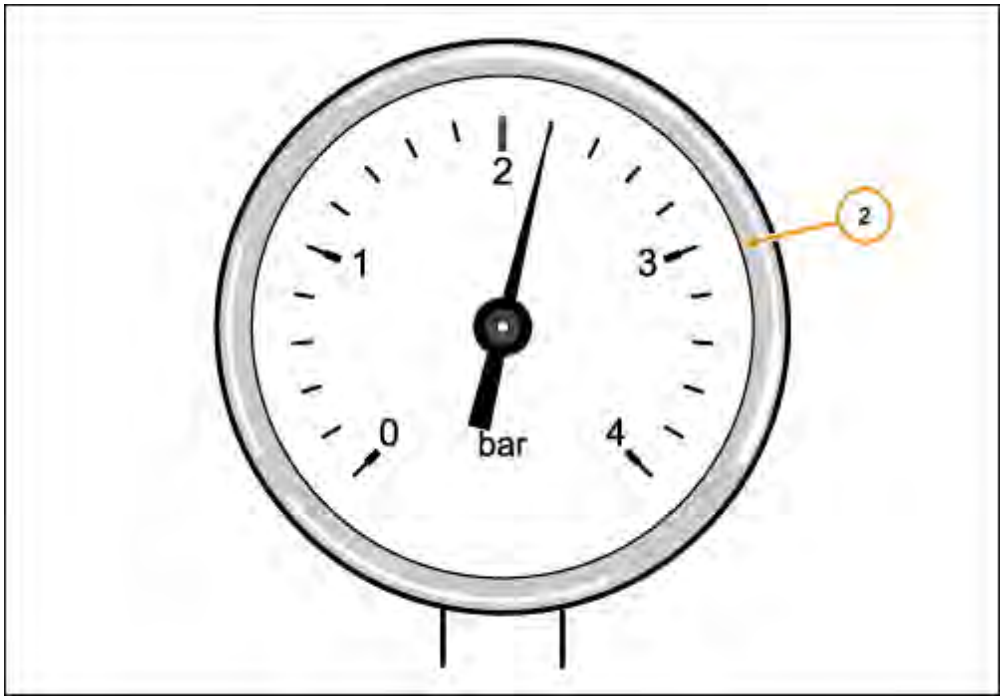

Care Point: Pump the brake pedal during each phase of the brake bleeding procedure.

Care Point: Pedal pump frequency = 3 seconds applied to 0.5 seconds released.

4 Fit bleed bottle to rear left calliper and open both inner and outer bleed screws (3, 4). M10 17 Nm

5 Pump pedal until no air is present.

6 Close bleed screws on rear left calliper (3, 4).

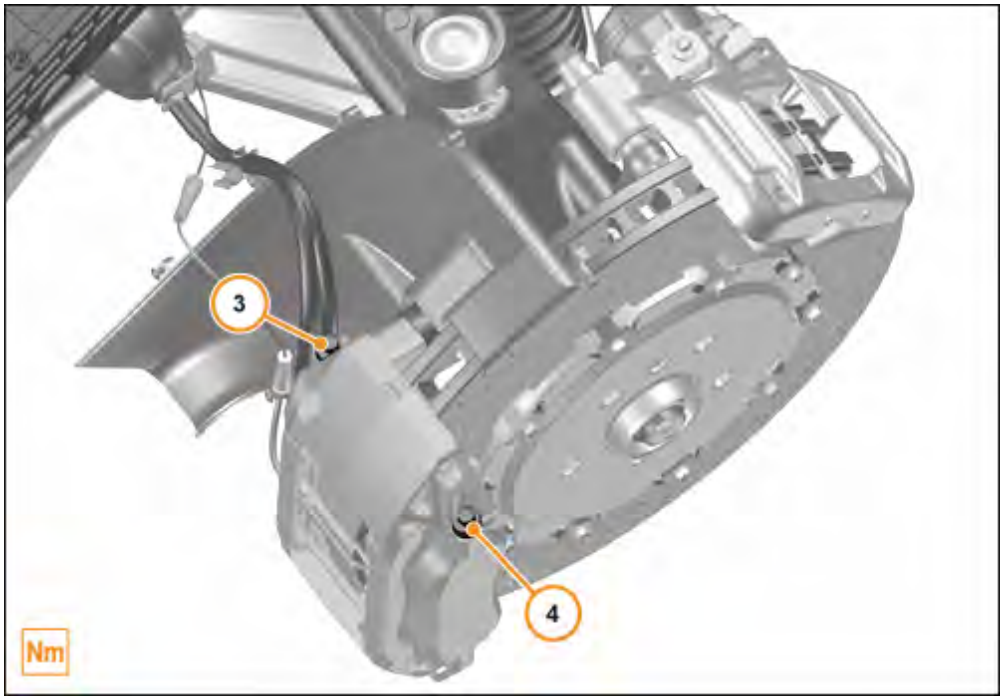

Care Point: Pedal pump frequency = 3 seconds applied to 0.5 seconds released.

7 Fit bleed bottle to front left calliper and open both inner and outer bleed screws (5, 6).

8 Pump pedal until no air is present.

9 Close bleed screws on front left calliper (5, 6).

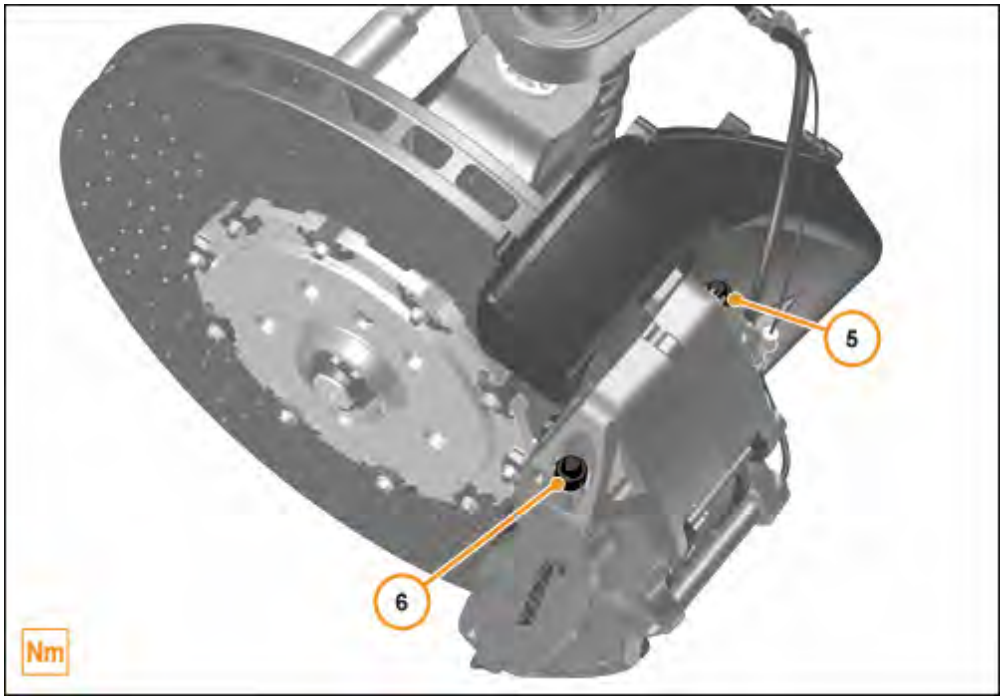

Care Point: Pedal pump frequency = 3 seconds applied to 0.5 seconds released.

10. Fit bleed bottle to front right calliper and open both inner and outer bleed screws (7, 8).
11. Pump pedal until no air is present.
12. Close bleed screws on front right calliper (7, 8).

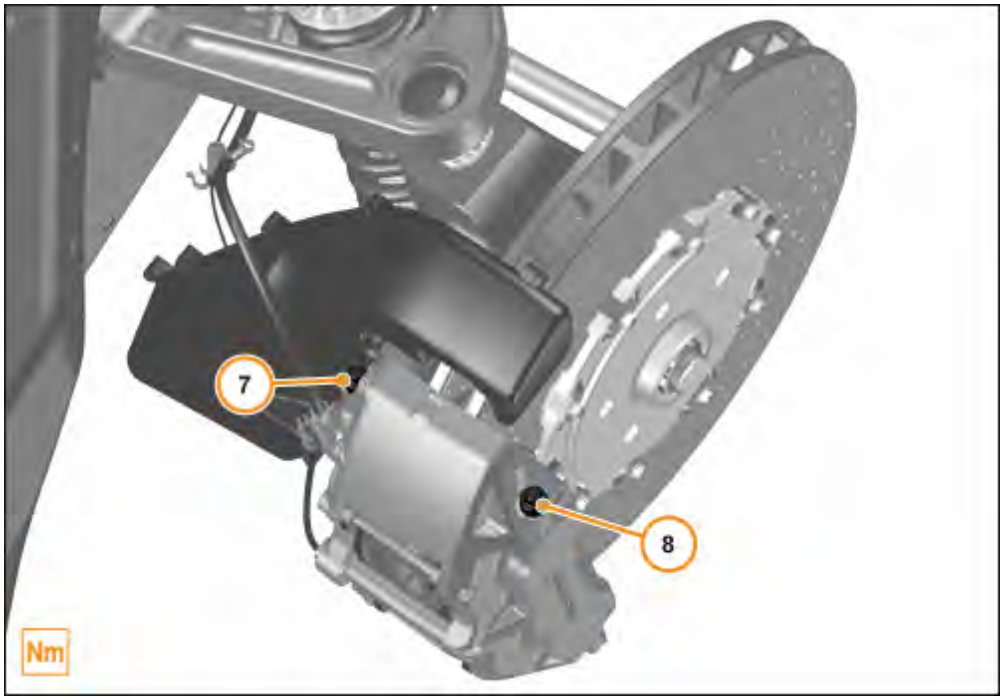

Care Point: Pedal pump frequency = 3 seconds applied to 0.5 seconds released.

13. Fit bleed bottle to rear right calliper and open both inner and outer bleed screws (9, 10).
14. Pump pedal until no air is present.
15. Close bleed screws on rear right calliper (9, 10).

Care Point: If process needs to be repeated allow the system to rest for a minimum of 5 minutes to prevent damage being caused to the braking system.

16. Disconnect pressure bleeding tool.
17. Check brake fluid level and fill to the correct level. Pentosin 5.1 or Mobil 1.5.1

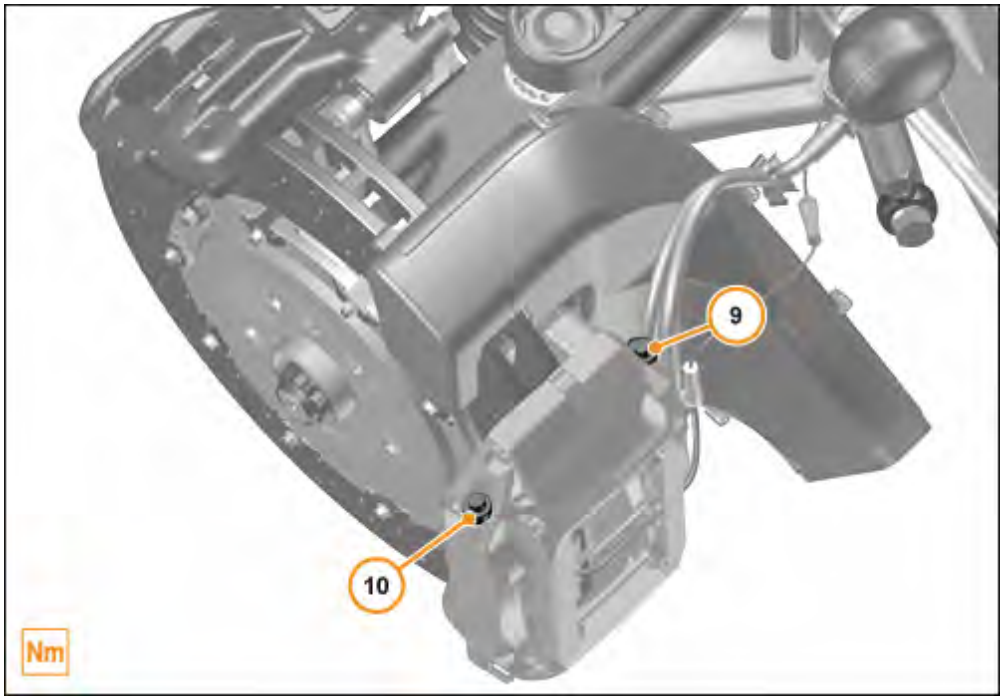

18 Close brake fluid reservoir cap (1).

.

19 Check functionality.

.

Torque settings

FG03 Chassis / C01 Brake System / Brake Discs Calipers Front / AA-RM-03C01-01-005 Fill/bleed fluid - Brake system

Description	Dimension	Value
Bleed Screw	M10	17 Nm

Instructions

⚠CAUTION!

New brake pads & discs.

If you do not ‘bed-in’ new brake pads &/or discs, the performance of the brakes can be decreased.
Follow the sequence of the procedure.

Care Point: New pads and discs must be bedded in, if not pad/ disc performance will be decreased.

Care Point: The brakes should be cold (Less than 40° C) before carrying out this procedure & if possible, only use light brake applications, whilst driving to the location

Bedding new brake pads/discs - carbon ceramic material (CCM)

1. Slow the vehicle sixteen times from 80 km/h (50 mph) to 30 km/h (19 mph) at 0.3g. The Max starting disc temperature should be 40˚C, whilst the Max disc temperature reached should be 300˚C at the end of the sixteenth stop. The cycle time is around 10 seconds (between brake applications).
2. Drive 3 km (2 miles) to allow the brakes to cool.

3. Slow the vehicle sixteen times from 120 km/h (75 mph) to 30 km/h (19 mph) at 0.5g. The Max starting disc temperature should be 40˚C, whilst the Max disc temperature reached should be 400˚C at the end of the sixteenth stop. The cycle time is around 15 seconds (between brake applications).
4. Drive 3 km (2 miles) to allow the brakes to cool.

5. Slow the vehicle ten times from 130 km/h (81 mph) to 30 km/h (19 mph) at 0.7g. The Max starting disc temperature should be 40˚C, whilst the Max disc temperature reached should be 700˚C at the end of the tenth stop. The cycle time is around 20 seconds (between brake applications).
6. Drive 4 km (2.5 miles) to allow the brakes to cool.

7. Use Full ABS (max pedal effort) and slow the vehicle three times from 100 km/h (62 mph) to 0 km/h (0 mph). The Max starting disc temperature should be 40°C. Increase the speed normally after you have slowed down.

   Care Point: The cool-down periods are the minimum needed and can be longer.

8. Drive 8 km (5 miles) to allow the brakes to cool.

9. After bedding, visually inspect discs to ensure there is a good/consistent coating of pad material on the disc surface (transfer surface) and no surface defects.

⚠CAUTION!

New brake pads & discs.

If you do not ‘bed-in’ new brake pads &/or discs, the performance of the brakes can be decreased.
Follow the sequence of the procedure.

Care Point: `Max deceleration`should be the maximum decelaration without triggering ABS. ABS should never be triggered while bleeding brakes for iron discs and pads.

Bedding new brake pads/discs - Iron (Fe)

1 Slow the vehicle from 48 km/h (30 mph) to 0 km/h (0 mph) at 0.3g 6 times. Allow 60 seconds (1 minute) between each application.

2 Slow the vehicle six times from 100 km/h (62 mph) to 0 km/h (0 mph) at 0.5g. Allow 60 seconds (1 minute) between each application.

3 Drive 3 km (2 miles) to allow the brakes to cool.

4 Slow the vehicle five times from 100 km/h (62 mph) to 0 km/h (0 mph) at 0.7g. Allow 120 seconds (2 minutes) between each application.

5 Slow the vehicle five times from 100 km/h (62 mph) to 0 km/h (0 mph) at 0.7g. Allow 60 seconds (1 minute) between each application.

6 Slow the vehicle five times from 100 km/h (62 mph) to 0 km/h (0 mph) at 0.7g. Allow 30 seconds between each application.

7 Drive 4 km (2.5 miles) to allow the brakes to cool.

8 Slow the vehicle five times from 100 km/h (62 mph) to 0 km/h (0 mph) at 0.7g. Accelerate the vehicle as quickly as possible between stops and allow no pause between applications.

9 Drive 8 km (5 miles) to allow the brakes to cool.

10 After bedding, visually inspect discs to ensure there is a good/consistent coating of pad material on the disc surface (transfer layer) and no surface defects.

Instructions

FG02 Body Systems / A04 Panels Glazing Paint / Floors Diffuser / AA-RM-02A04-04-001 - Remove/install floor panel - Engine/fuel tank

Preparation work

1. AA-RM-02A04-04-007 Secure/lift vehicle on lifting platform

Remove floor panel - Engine/fuel tank

Care Point: Two technicians required.

1. Remove bolts (1) and washers. M6 x 20 10 Nm
2. Remove bolts (2). M6 x 12 6 Nm

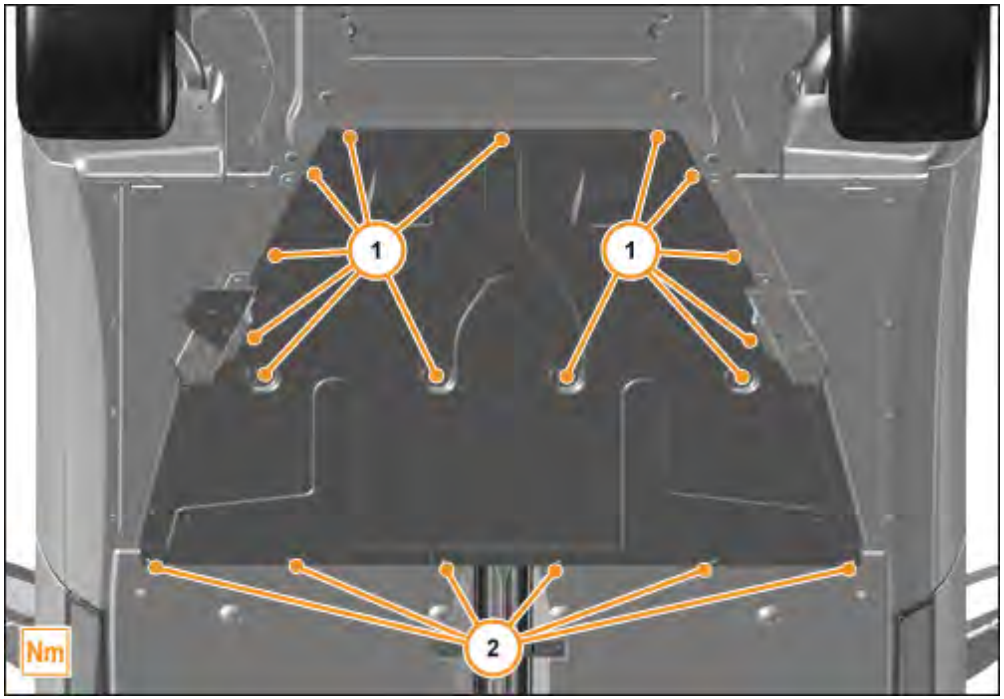

3. Remove bolts (3). M6 x 16 10 Nm
4. Remove engine/fuel tank floor panel (4).

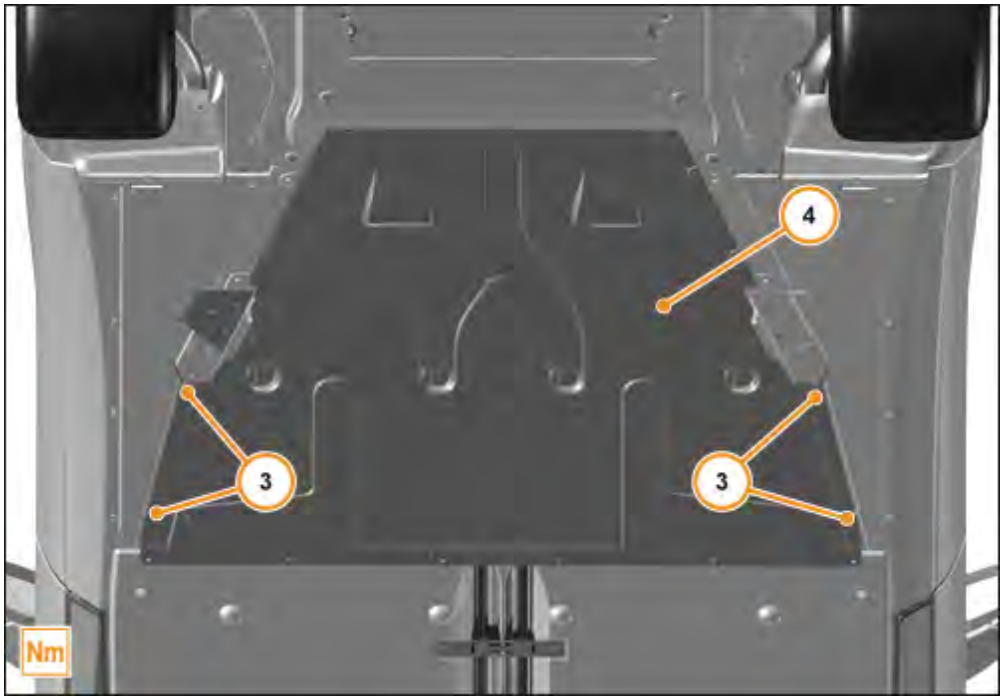

Install floor panel - Engine/fuel tank

1. Install components in reverse order.

Torque settings

FG02 Body Systems / A04 Panels Glazing Paint / Floors Diffuser / AA-RM-02A04-04-001 - Remove/install floor panel - Engine/fuel tank

Description	Dimension	Value
Bolt Floor panel engine/fuel tank	M6 x 20	10 Nm
Bolt Floor panel engine/fuel tank	M6 x 12	6 Nm
Bolt Floor panel engine/fuel tank	M6 x 16	10 Nm

Instructions

FG02 Body Systems / A04 Panels Glazing Paint / Floors Diffuser / AA-RM-02A04-04-002 - Remove/install floor panel - Front - Up to MY14

Preparation work

1. AA-RM-02A04-04-007 Secure/lift vehicle on lifting platform

Remove floor panel - Front - Up to MY14

1. Remove bolts (1). M6 x 20 2 Nm
2. Remove bolts (2). M6 x 20 6 Nm .
3. Remove tyre spoiler (3).

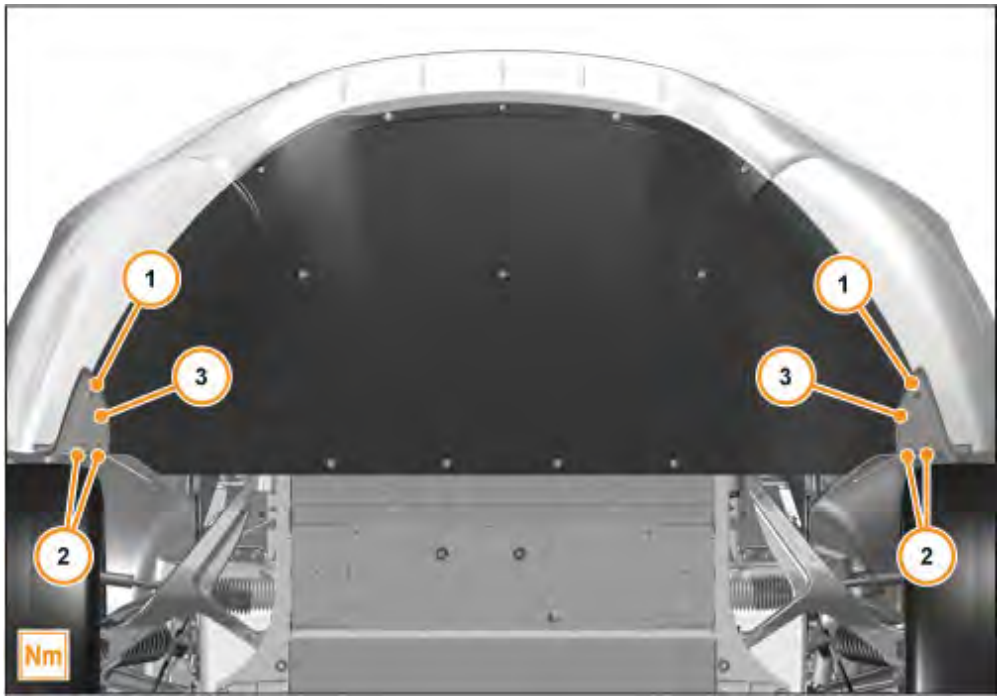

4. Remove bolts (5). M6 x 20 4 Nm

5. Detach floor panel (4).

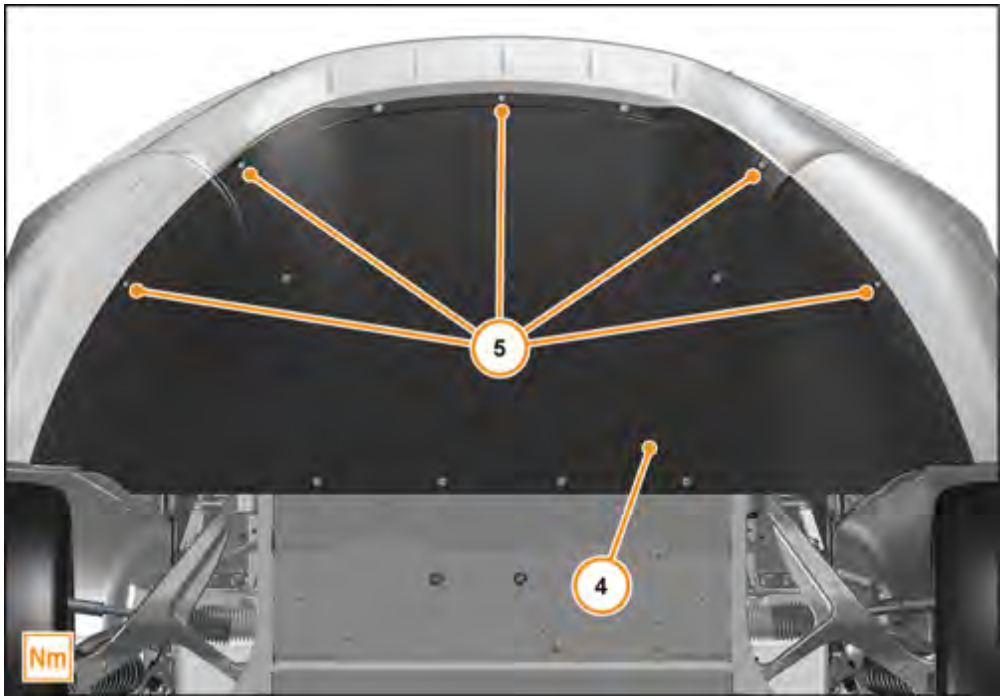

Care Point: With the aid of another technican support the floor panel.

6. Remove bolts (6). M6 x 20 4 Nm

7. Remove floor panel.

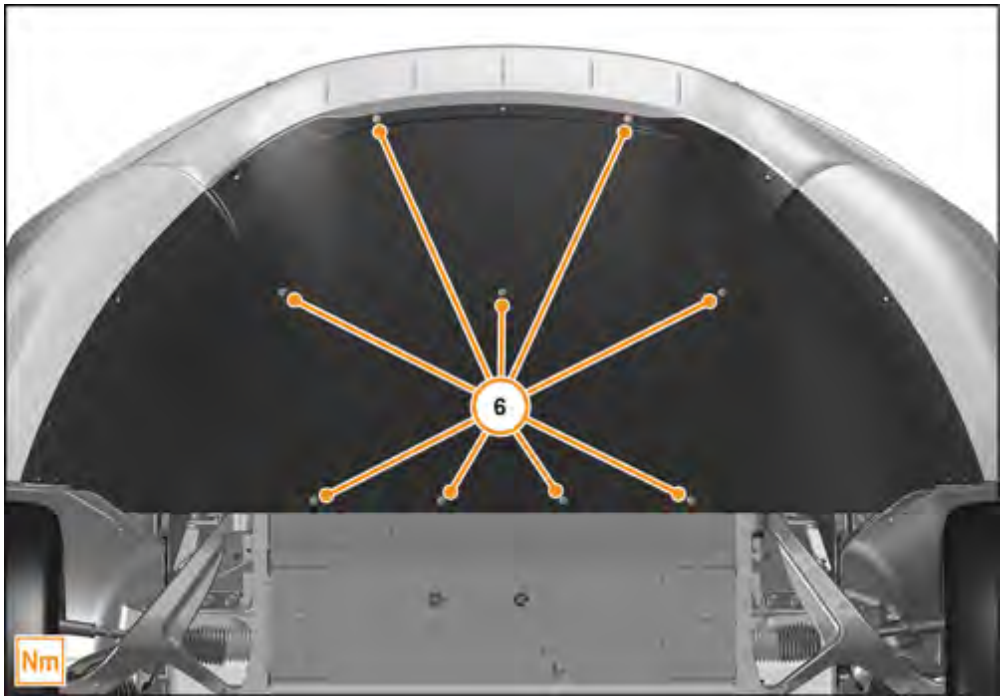

Install floor panel - Front - Up to MY14

1. Install components in reverse order.

Torque settings

FG02 Body Systems / A04 Panels Glazing Paint / Floors Diffuser / AA-RM-02A04-04-002 - Remove/install floor panel - Front - Up to MY14

Description	Dimension	Value
Bolt tyre spoiler - front panel	M6 x 20	2 Nm
Bolt Floor panel	M6 x 20	6 Nm
Bolt Front floor panel	M6 x 20	4 Nm
Bolt Front floor panel	M6 x 20	4 Nm

Instructions

FG02 Body Systems / A04 Panels Glazing Paint / Floors Diffuser / AA-RM-02A04-04-003 - Remove/install floor panel - Tunnel

Preparation work

1. AA-RM-02A04-04-007 Secure/lift vehicle on lifting platform

Remove floor panel - Tunnel

1. Remove bolts M6 x 16 (2). M6 x 16 10 Nm
2. Remove tunnel floor panel (1).

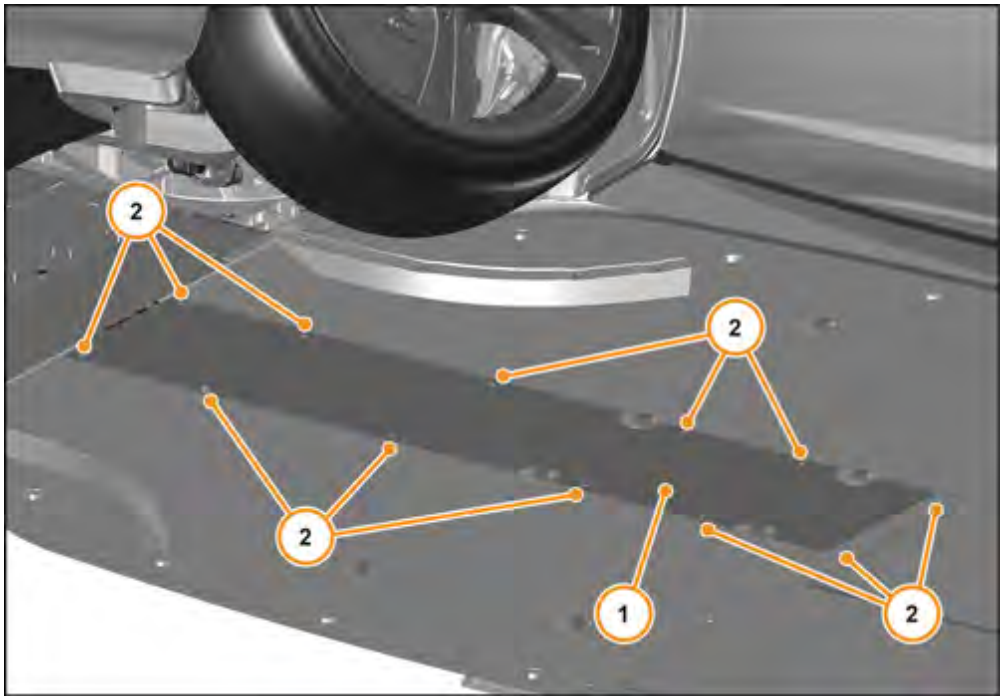

Install floor panel - Tunnel

1. Install components in reverse order.

Torque settings

FG02 Body Systems / A04 Panels Glazing Paint / Floors Diffuser / AA-RM-02A04-04-003 - Remove/install floor panel - Tunnel

Description	Dimension	Value
Bolt Floor panel tunnel	M6 x 16	10 Nm

Instructions

FG02 Body Systems / A04 Panels Glazing Paint / Floors Diffuser / AA-RM-02A04-04-005 - Remove/install floor panel - Rear lower extension

Preparation work

1. AA-RM-02A04-04-007 Secure/lift vehicle on lifting platform.

2. AA-RM-03B03-01-001 Remove/install wheels

3. AA-RM-02A02-03-001 Remove/install wheel arch liner - Rear

4. AA-RM-02A04-04-001 Remove/install floor panel - Engine/fuel tank

Care Point: Ensure that the fuel filler drain hose does not become detached from the fuel filler bowl whilst carrying out this procedure.

Care Point: The fuel filler drain hose will only be attached to the left hand floor panel - rear lower extension.

Care Point: Only carry out steps 1 and 2 if you are replacing both or the left hand only floor panel - rear lower extension.

Remove floor panel - Rear lower extension

1. Remove jubilee clip

2. Detach hose

3. Remove bolt (1). M? 5 Nm

4. Remove bolts (2). M6 x 20 2 Nm

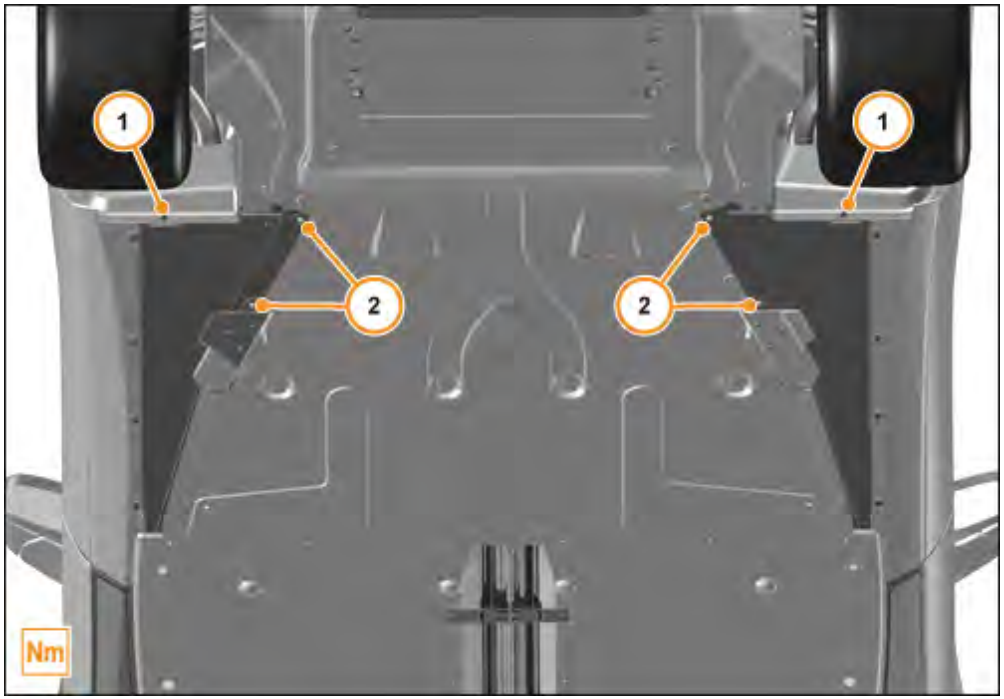

5. Remove bolts (3). 4.2 x 16 2 Nm

6. Remove floor panel - Rear lower extension (4).

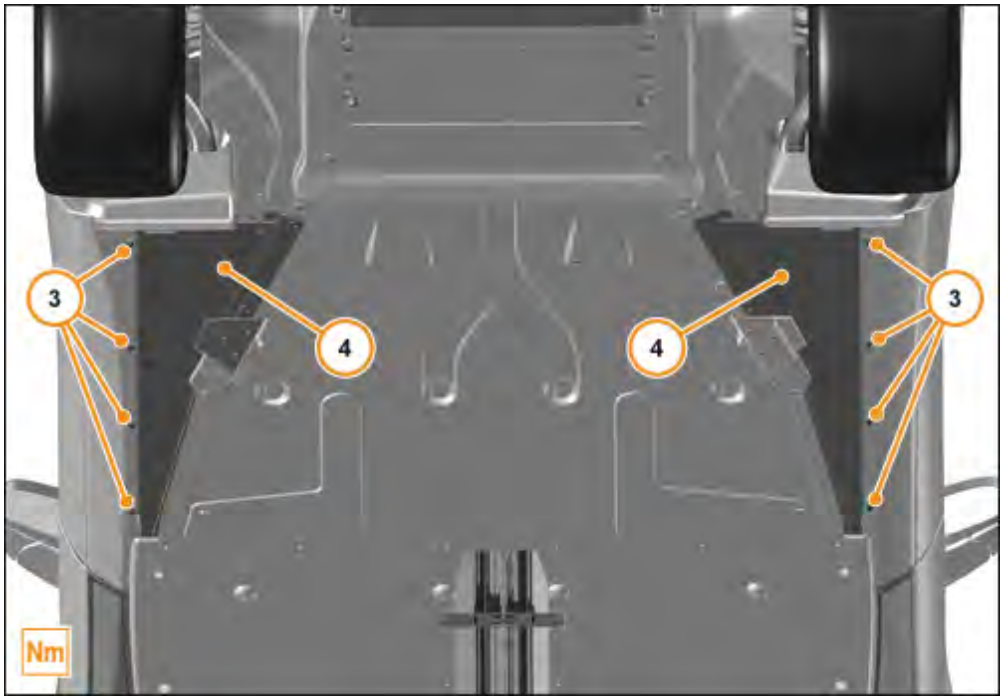

Care Point: Please ensure that the fuel filler drain hose is fitted securely to the fuel filler bowl, and also the left hand floor panel - rear lower extension before installing all pre work components.

Install floor panel - Rear lower extension

1. Install components in reverse order.

Torque settings

FG02 Body Systems / A04 Panels Glazing Paint / Floors Diffuser / AA-RM-02A04-04-005 - Remove/install floor panel - Rear lower extension

Description	Dimension	Value
Bolt Rear lower extension - Wheel arch liner	M?	5 Nm
Bolt tyre spoiler - front panel	M6 x 20	2 Nm

Screw tyre spoiler - front panel	4.2 x 16	2 Nm

Instructions

FG02 Body Systems / A04 Panels Glazing Paint / Floors Diffuser / AA-RM-02A04-04-006 - Remove/install tyre spoilers, front guide vanes, rear guide vanes

Preparation work

1. AA-RM-02A04-04-007 Secure/lift vehicle on lifting platform.

Remove tyre spoilers - Up to MY14

1. Remove screw (1).
2. Remove bolt (2). M6 x 20 2 Nm
3. Remove screws (3). 4.2 x 16 2 Nm
4. Remove tyre spoiler (4).

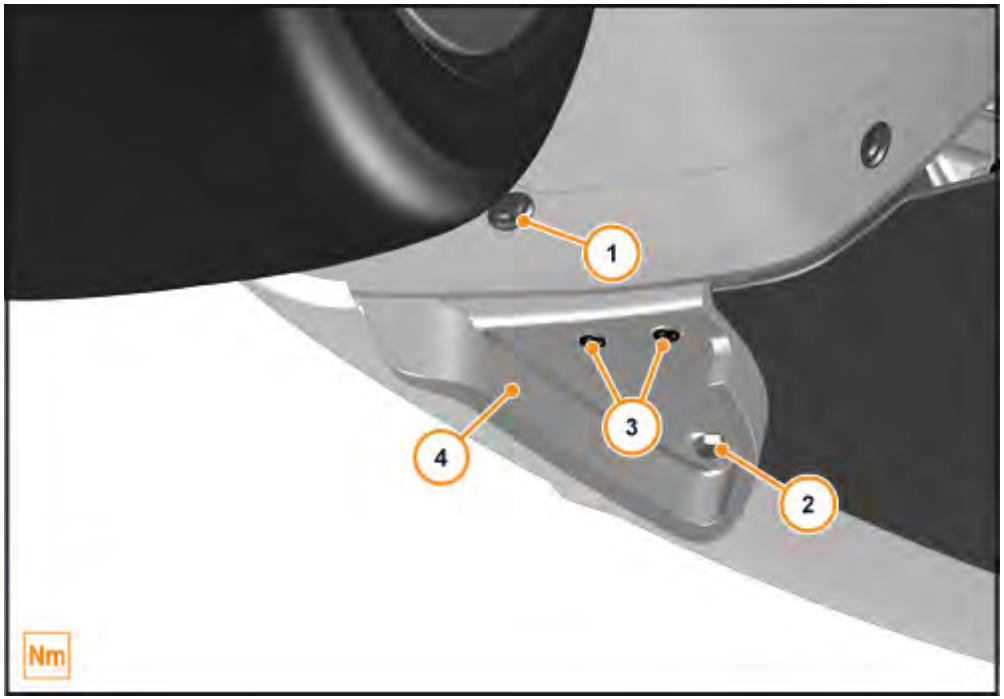

Remove tyre spoilers - From MY15 onwards

1. Remove bolts (1). M6 x 20 4 Nm
2. Remove tyre spoilers (2).

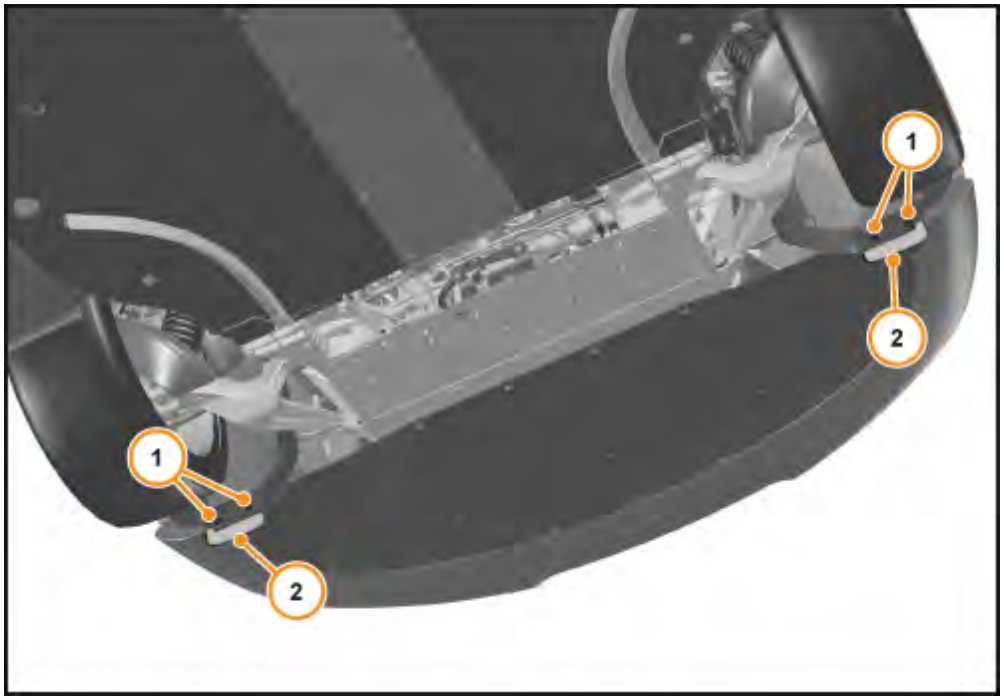

Remove front guide vanes

1. Remove screws (1). M6 x 16 6 Nm
2. Remove front guide vanes (2).

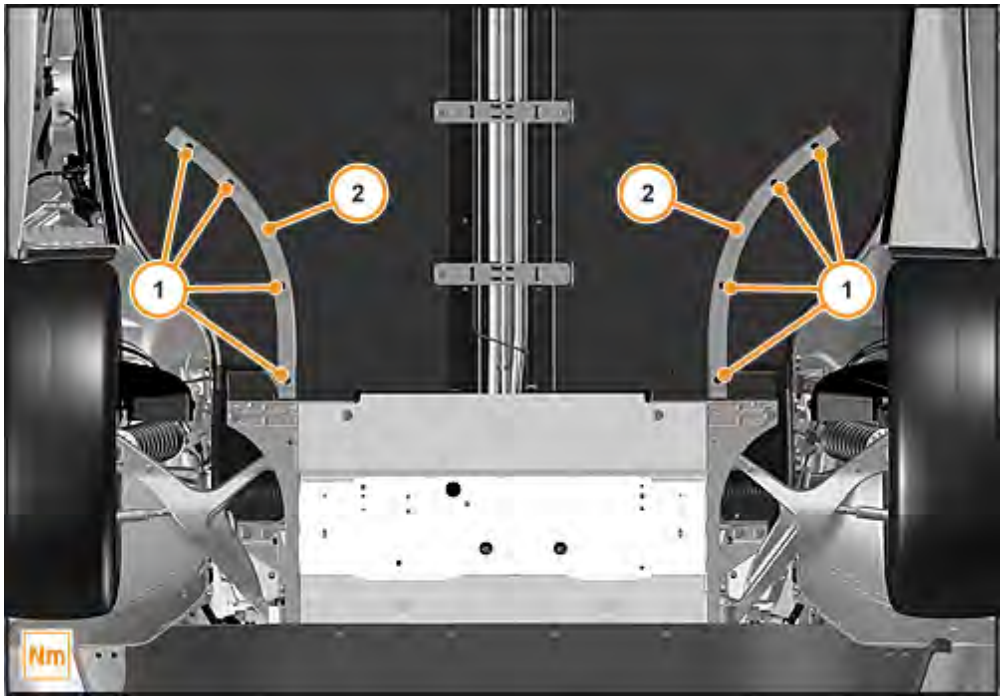

Remove rear guide vanes

1. Remove bolts (1). M6 x 16 2.5 Nm
2. Remove guide vanes (2).

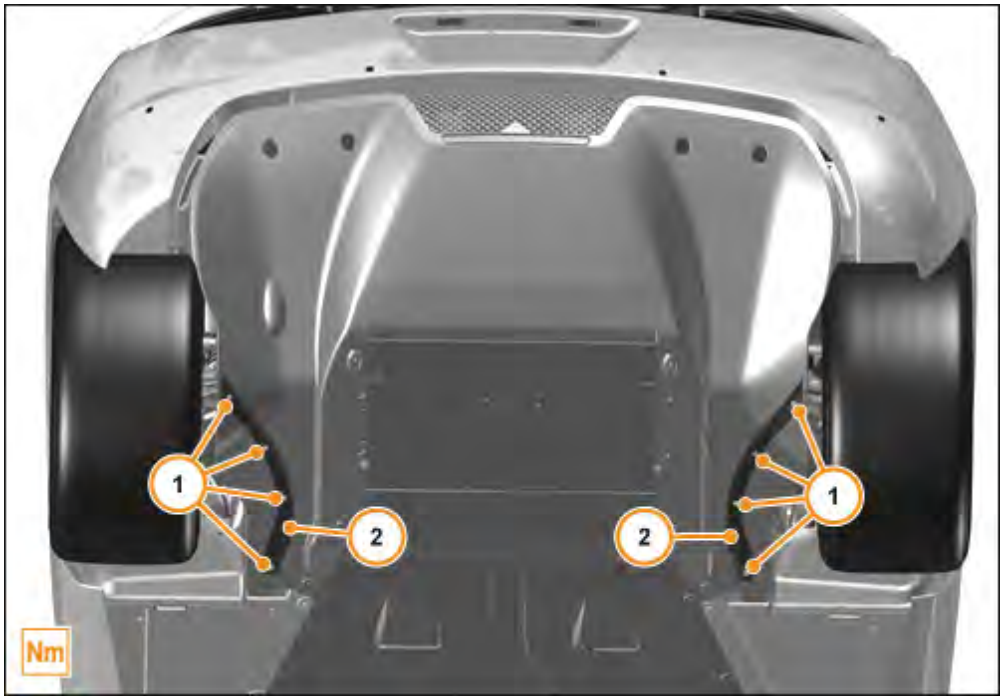

Install tyre spoilers, front guide vanes, rear guide vanes

1. Install components in reverse order.

Torque settings

FG02 Body Systems / A04 Panels Glazing Paint / Floors Diffuser / AA-RM-02A04-04-006 - Remove/install tyre spoilers, front guide vanes, rear guide vanes

Description	Dimension	Value
Bolt tyre spoiler - front panel	M6 x 20	2 Nm
Screw tyre spoiler - front panel	4.2 x 16	2 Nm
Bolt - Wheel arch liner/Floor - tyre spoiler (MY15)	M6 x 20	4 Nm
Screw front guide vane - tub	M6 x 16	6 Nm
Bolt Guide vane - Diffuser	M6 x 16	2.5 Nm

Instructions

FG02 Body Systems / A04 Panels Glazing Paint / Floors Diffuser / AA-RM-02A04-04-008 - Remove/install floor panel - Transmission

Preparation work

1. AA-RM-02A04-04-007 Secure/lift vehicle on lifting platform

Remove floor panel - Transmission

1. Remove bolts (2). M6 x 20 10 Nm
2. Partially remove transmission floor panel (1).

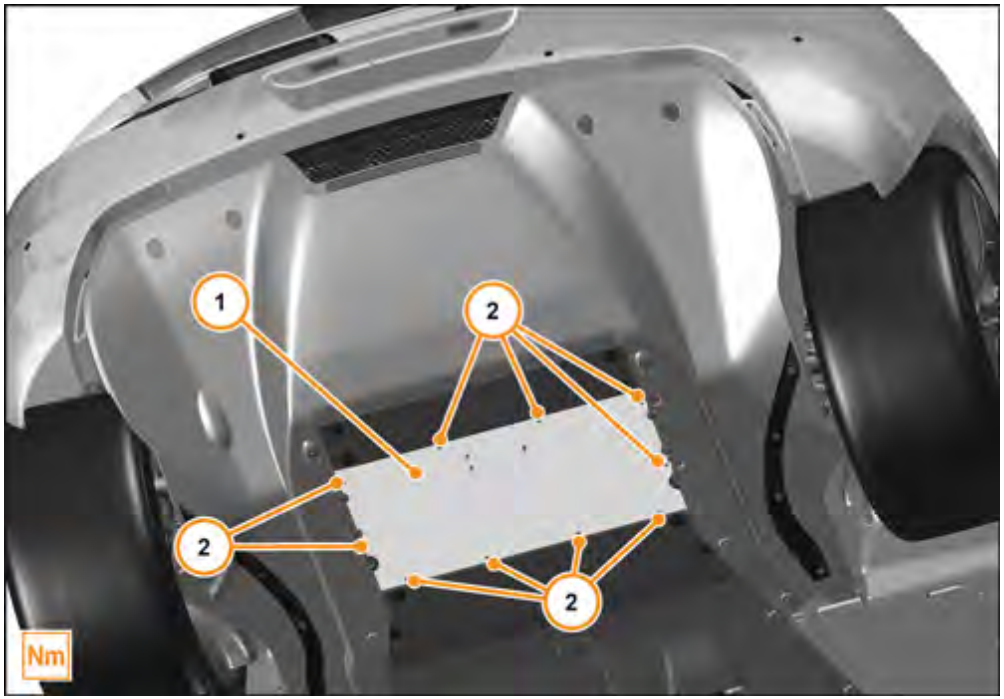

3. Disconnect electrical connector (3).
4. Remove transmission floor panel.

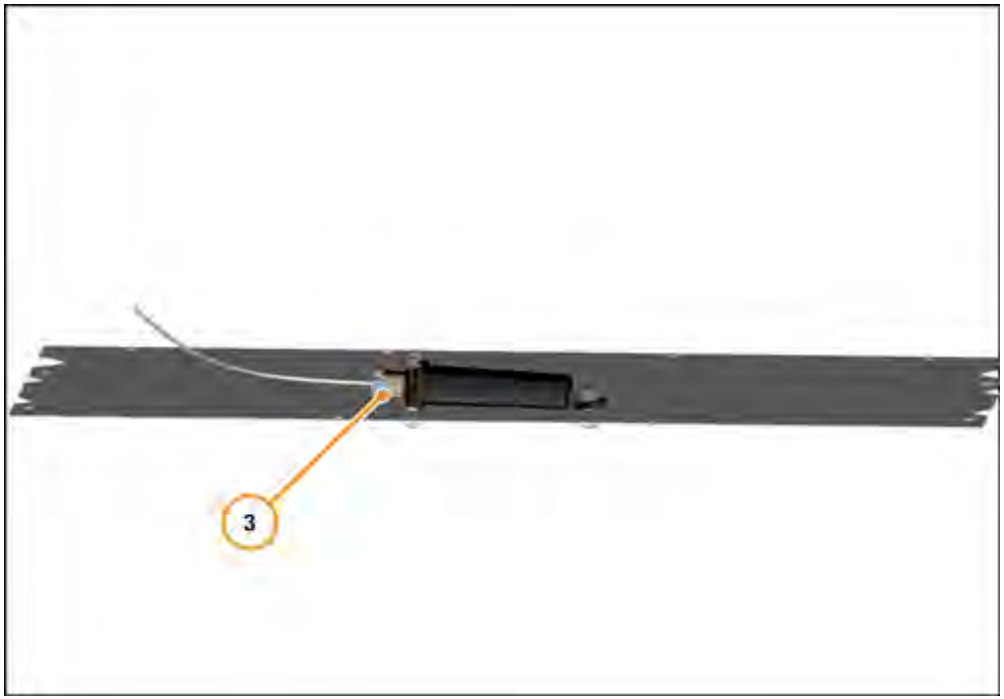

Install floor panel - Transmission

1. Install components in reverse order

Torque settings

FG02 Body Systems / A04 Panels Glazing Paint / Floors Diffuser / AA-RM-02A04-04-008 - Remove/install floor panel - Transmission

Description	Dimension	Value
Bolt Floor panel transmission	M6 x 20	10 Nm

Instructions

FG03 Chassis / B01 Front Suspension / Front Suspension LH / AA-RM-03B01-02-003 - Remove/install upper wishbone - Front

Preparation work

1. AA-RM-02A04-04-007 Secure/lift vehicle on lifting platform.
2. AA-RM-03B03-01-001 Remove/install wheels.
3. AA-RM-02A02-03-002 Remove/install wheel arch liner - Front
4. AA-RM-03C01-01-002 Remove/install brake - Caliper - Front.
5. AA-RM-02A02-03-005 Remove/install ducts - Brake disc cooling - Front.
6. AA-RM-03C01-01-003 Remove/install brake - Disc - Front.
7. AA-RM-05M02-01-006 Remove/install wheel speed sensor - Front
8. AA-RM-03B01-02-004 Remove/install upright - Front

Remove upper wishbone - Front

Care Point: Ensure correct torque value is applied to the correct bolt size. M8 (M8 x 30 33 Nm), M10 (M10 x 30 63 Nm).
Bolt size dependant on build date.

1. Remove bolts (1). M8 x 30 33 Nm M10 x 30 63 Nm
2. Remove wishbone (2).

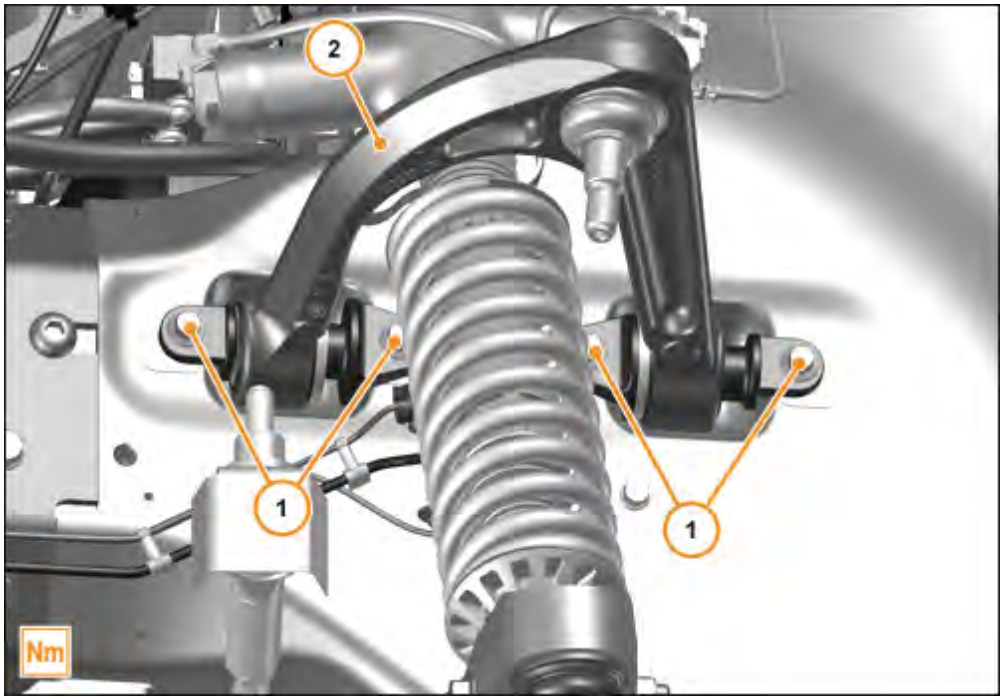

Install upper wishbone - Front

1. Install components in reverse order.

2. Check chassis geometry. AA-RM-03B03-01-002 - Perform a wheel alignment check

   Care Point: Once vehicle is on ground.

3. Apply pressure to top of wheel towards vehicle. If excessive inward movement of wheel is present, the upper ball joint has failed. The wishbone will require replacing.

Torque settings

FG03 Chassis / B01 Front Suspension / Front Suspension LH / AA-RM-03B01-02-003 - Remove/install upper wishbone - Front

Description	Dimension	Value

Bolt Wishbone - Subframe - M8	M8 x 30	33 Nm
Bolt Wishbone - Subframe - M10	M10 x 30	63 Nm
Bolt Wishbone - Subframe - M8	M8 x 30	33 Nm
Bolt Wishbone - Subframe - M10	M10 x 30	63 Nm

Instructions

FG03 Chassis / B01 Front Suspension / Front Suspension LH / AA-RM-03B01-02-002 - Remove/install lower wishbone - Front

Preparation work

1. AA-RM-02A04-04-007 Secure/lift vehicle on lifting platform.
2. AA-RM-03B03-01-001 Remove/install wheels.
3. AA-RM-02A02-03-002 Remove/install wheel arch liner - Front
4. AA-RM-03C01-01-002 Remove/install brake - Caliper - Front.
5. AA-RM-02A02-03-005 Remove/install ducts - Brake disc cooling - Front.
6. AA-RM-03C01-01-003 Remove/install brake - Disc - Front.
7. AA-RM-05M02-01-006 Remove/install wheel speed sensor - Front
8. AA-RM-03B01-02-004 Remove/install upright - Front

Remove lower wishbone - Front

1. Remove bolt (1). M5 x 10 5 Nm

2. Remove bolt (2). M10 x 85 60 Nm

Care Point: Use the pre set special tool to achieve full access to the bolts, and to achieve the correct torque value.

Care Point: Ensure correct torque value is applied to the correct bolt size. M8 (M8 x 30 33 Nm), M10 (M10 x 30 63 Nm).
Bolt size dependant on build date.

3. Remove bolts (3). M8 x 30 33 Nm M10 x 30 63 Nm
4. Remove wishbone (4).

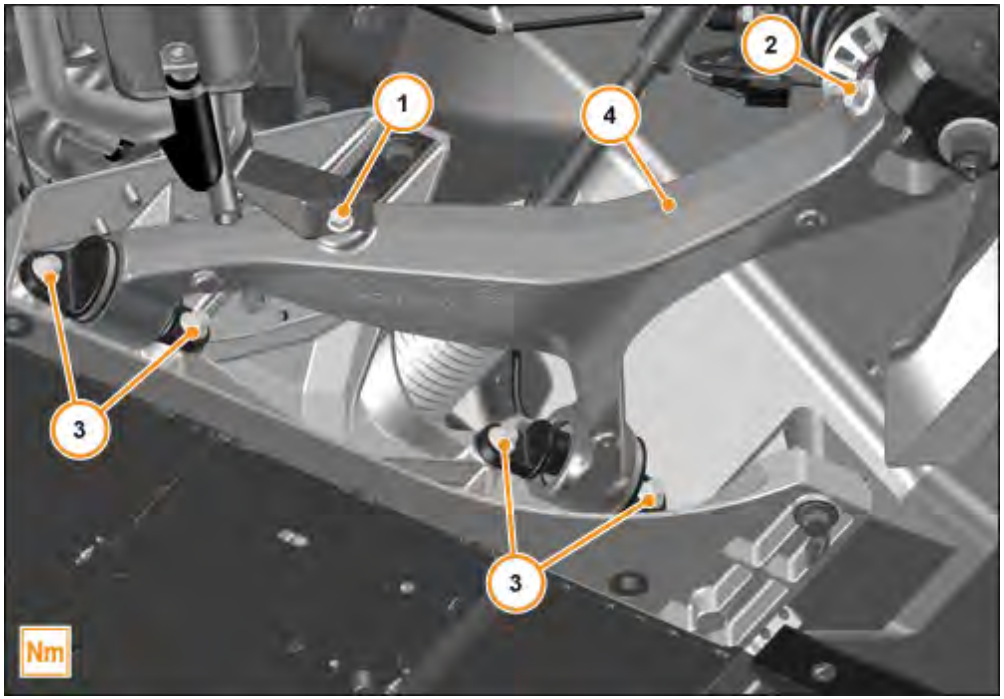

Install lower wishbone - Front

1. Install components in reverse order.

   Care Point: Carry out steps 2 to 4, if a front lower wishbone is refitted or a new one is fitted.

2. Connect McLaren Diagnostic System, proceed to Diagnostic Toolbox within **Power Chassis Control Unit (PCCU)**.

3. Access Sequences section.

4. Carry out Damping Sensor Calibration.

5. Check chassis geometry. AA-RM-03B03-01-002 - Perform a wheel alignment check

   Care Point: Once vehicle is on ground.

6. Apply pressure to top of wheel towards vehicle. If excessive inward movement of wheel is present, the upper ball joint has failed. The wishbone will require replacing.

Torque settings

FG03 Chassis / B01 Front Suspension / Front Suspension LH / AA-RM-03B01-02-002 - Remove/install lower wishbone - Front

Description	Dimension	Value
Bolt Bracket sensor suspension displacement - Lower wishbone	M5 x 10	5 Nm
Bolt/nut Lower wishbone - Actuator	M10 x 85	60 Nm
Bolt Wishbone - Subframe - M8	M8 x 30	33 Nm
Bolt Wishbone - Subframe - M10	M10 x 30	63 Nm
Bolt Wishbone - Subframe - M8	M8 x 30	33 Nm
Bolt Wishbone - Subframe - M10	M10 x 30	63 Nm

Instructions

FG03 Chassis / B02 Rear Suspension / Rear Suspension LH / AA-RM-03B02-01-001 - Remove/install upper wishbone - Rear

Preparation work

1. AA-RM-02A04-04-007 Secure/lift vehicle on lifting platform
2. AA-RM-03B03-01-001 Remove/install wheels
3. AA-RM-02A02-03-001 Remove/install wheel arch liner - rear
4. AA-RM-03C01-03-001 Remove/install brake caliper - rear
5. AA-RM-02A02-03-007 Remove/Install cooling duct

Remove upper wishbone - Rear

Care Point: Convex washers on left hand side only. Plain washer on right hand side.

1. Remove bolt (1). M14 x 60 100 Nm

Care Point: Observe excentric stepped washer.

Care Point: Use ball joint splitter to separate.

2. Remove nut (2). M14 100 Nm

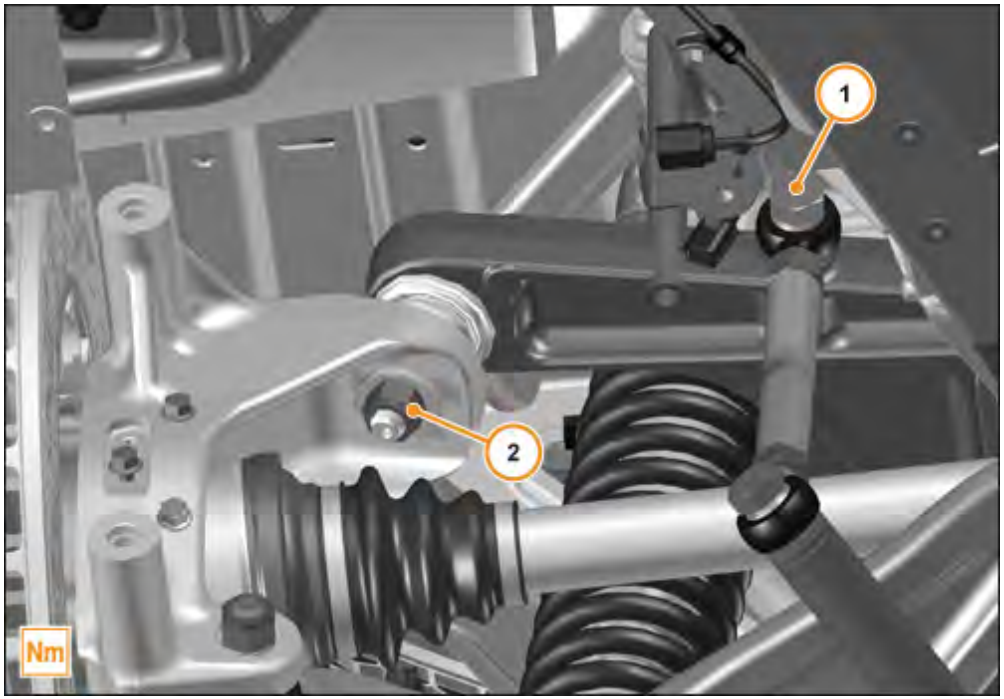

Care Point: Use the pre set special tool to achieve full access to the bolts, and to achieve the correct torque value.

Care Point: Ensure correct torque value is applied to the correct bolt size. M8 (M8 x 25 33 Nm), M10 (M10 x 30 63 Nm).
Bolt size dependant on build date.

3. Remove bolts (3). M8 x 25 33 Nm M10 x 30 63 Nm
4. Remove upper wishbone (4).

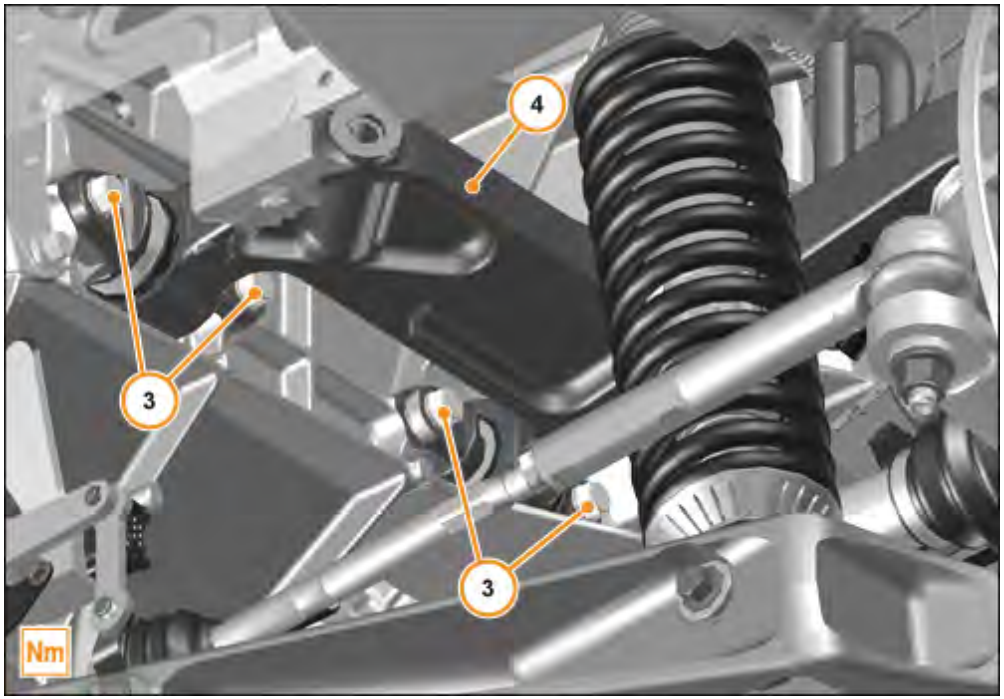

Install upper wishbone - Rear

1. Install components in reverse order.
2. Check chassis geometry AA-RM-03B03-01-002 - Perform a wheel alignment check .

   Care Point: Once vehicle is on ground.

3. Apply pressure to top of wheel towards vehicle. If excessive inward movement of wheel is present, the upper ball joint has failed. The wishbone will require replacing.

Torque settings

FG03 Chassis / B02 Rear Suspension / Rear Suspension LH / AA-RM-03B02-01-001 - Remove/install upper wishbone - Rear

Description	Dimension	Value

Bolt Drop link	M14 x 60	100 Nm
Nut Upper wishbone - Upright	M14	100 Nm
Bolt Wishbone - Subframe - M8	M8 x 25	33 Nm
Bolt Wishbone - Subframe - M10	M10 x 30	63 Nm
Bolt Wishbone - Subframe - M8	M8 x 25	33 Nm
Bolt Wishbone - Subframe - M10	M10 x 30	63 Nm

Instructions

FG03 Chassis / B02 Rear Suspension / Rear Suspension LH / AA-RM-03B02-01-002 - Remove/install lower wishbone - Rear

Preparation work

1. AA-RM-02A04-04-007 Secure/lift vehicle on lifting platform

2. AA-RM-03B03-01-001 Remove/install wheels

3. AA-RM-02A02-03-001 Remove/install wheel arch liner - rear

Remove lower wishbone - Rear

1. Cut cable ties (1).

2. Remove C-clip (2).

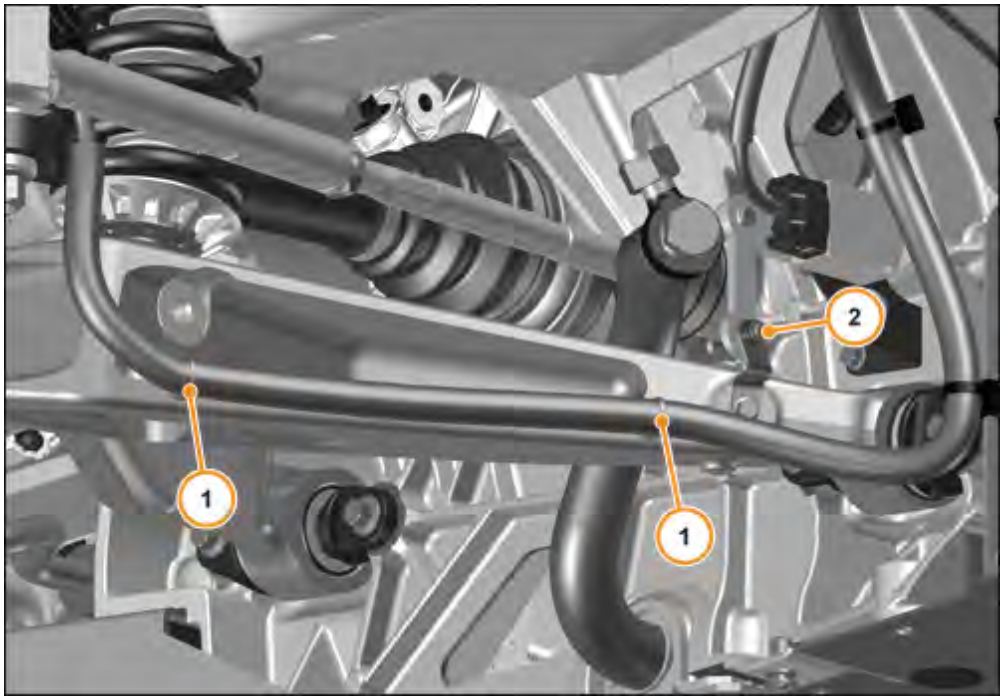

3. Remove bolt (3). M14 x 110 90 Nm

4. Detach bolt (4). M10 x 70 60 Nm

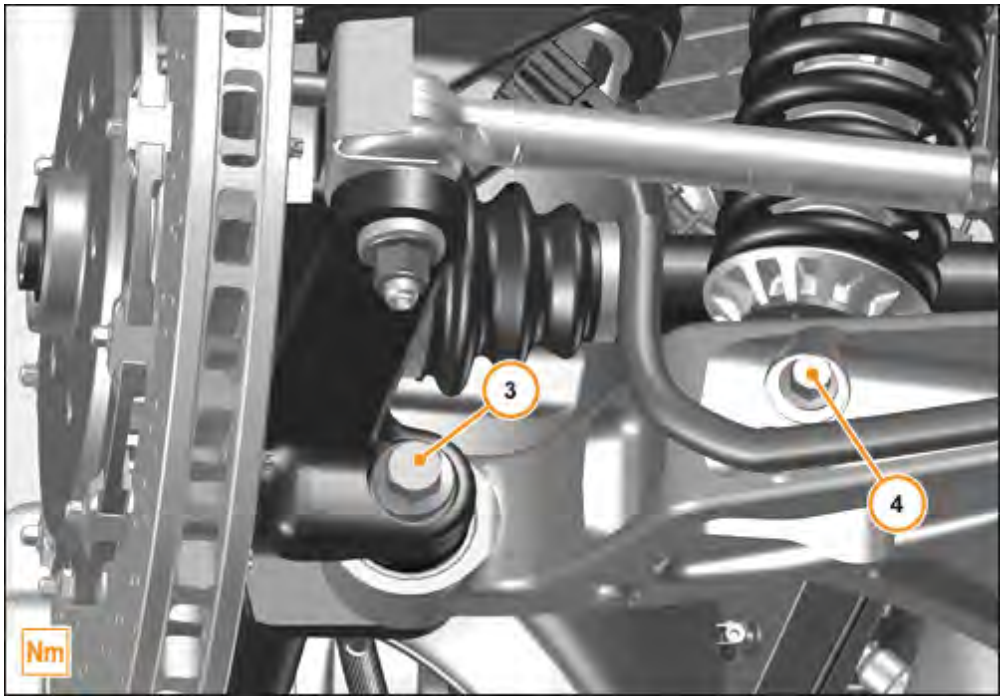

Care Point: Use the pre set special tool to achieve full access to the bolts, and to achieve the correct torque value.

Care Point: Ensure correct torque value is applied to the correct bolt size. M8 (M8 x 25 33 Nm), M10 (M10 x 30 63 Nm).
Bolt size dependant on build date.

5. Remove bolts (5). M10 x 30 63 Nm M8 x 25 33 Nm
6. Remove bolt (4).

7. Remove lower wishbone (6).

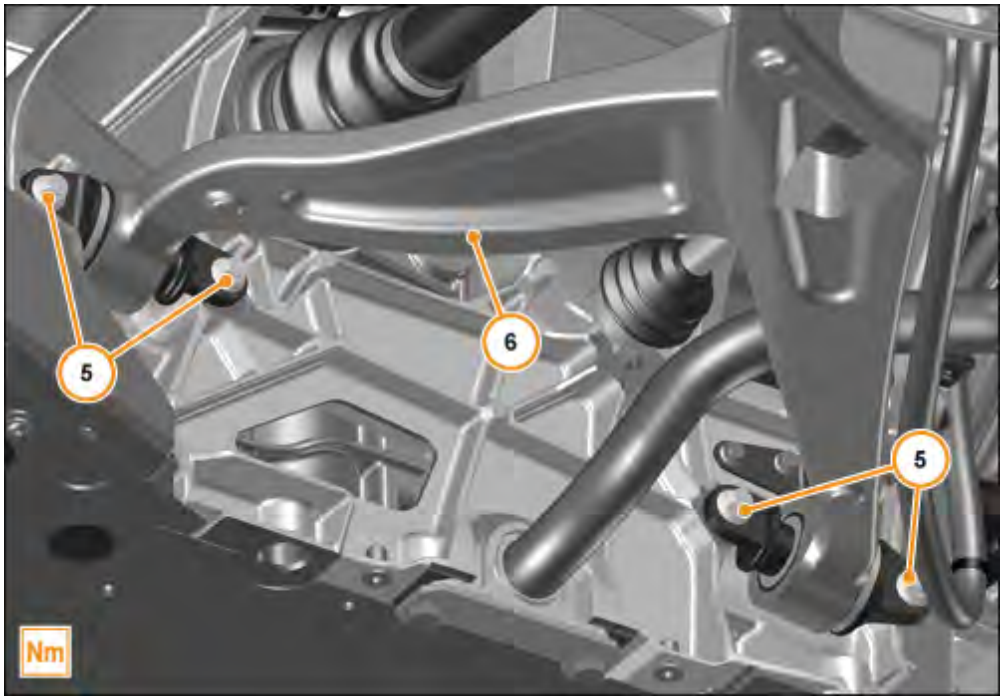

Install lower wishbone - Rear

1. Install components in reverse order.

2. Check chassis geometry AA-RM-03B03-01-002 - Perform a wheel alignment check .

   Care Point: Carry out steps 2 to 4, if a rear lower wishbone is refitted or a new one is fitted.

3. Connect McLaren Diagnostic System, proceed to Diagnostic Toolbox within **Power Chassis Control Unit (PCCU)**.

4. Access Sequences section.

5. Carry out Damping Sensor Calibration.

   Care Point: Once vehicle is on ground.

6. Apply pressure to top of wheel towards vehicle. If excessive inward movement of wheel is present, the upper ball joint has failed. The wishbone will require replacing.

Torque settings

FG03 Chassis / B02 Rear Suspension / Rear Suspension LH / AA-RM-03B02-01-002 - Remove/install lower wishbone - Rear

Description	Dimension	Value
Bolt Lower wishbone - Upright	M14 x 110	90 Nm
Bolt Actuator bottom - Lower wishbone	M10 x 70	60 Nm
Bolt Wishbone - Subframe - M8	M8 x 25	33 Nm
Bolt Wishbone - Subframe - M10	M10 x 30	63 Nm
Bolt Wishbone - Subframe - M10	M10 x 30	63 Nm
Bolt Wishbone - Subframe - M8	M8 x 25	33 Nm

Instructions

FG03 Chassis / D01 Steering System / Steering System / AA-RM-03D01-01-001 - Remove/install track rod

Preparation work

1. AA-RM-02A04-04-007 Secure/lift vehicle on lifting platform

2. AA-RM-03B03-01-001 Remove/install wheels

Remove track rod

Care Point: Only remove battery and washer fluid reservoir if removing left hand track rod.

1. Release lock nut (1) and wind up steering arm.
2. Remove nut (2). M14 30 Nm

Care Point: Use a ball joint separator.

3. Separate track rod (3) from upright.

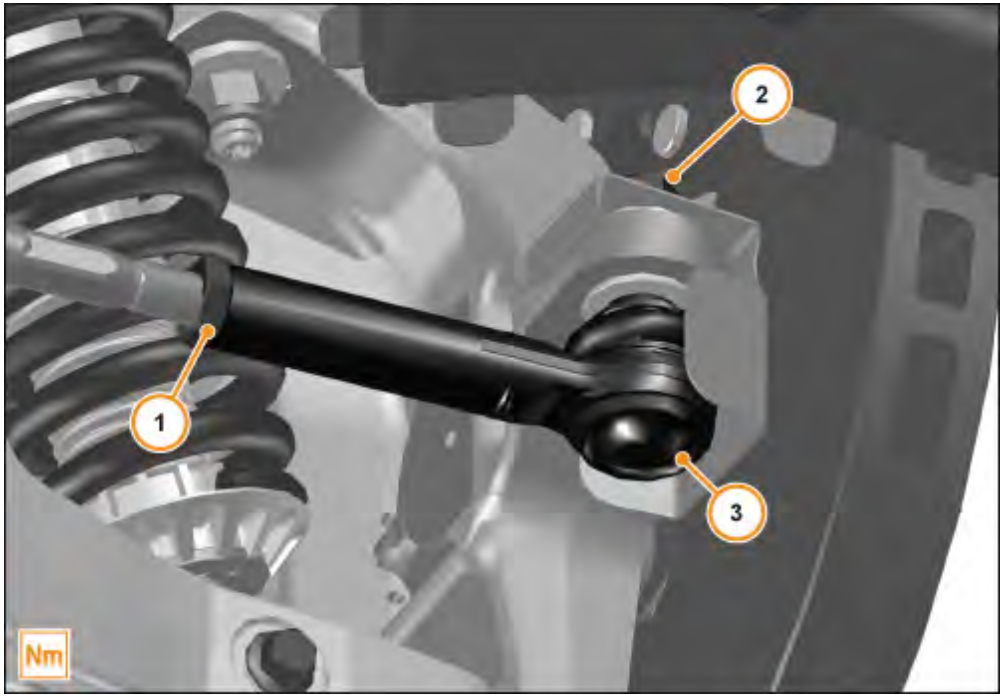

Care Point: Ensure the mark is clear and will not wipe off before new track rod is fitted.

4. Mark steering arm thread (4) with position of track rod (m).
5. Remove track rod (3), counting the number of full rotations it takes to remove.

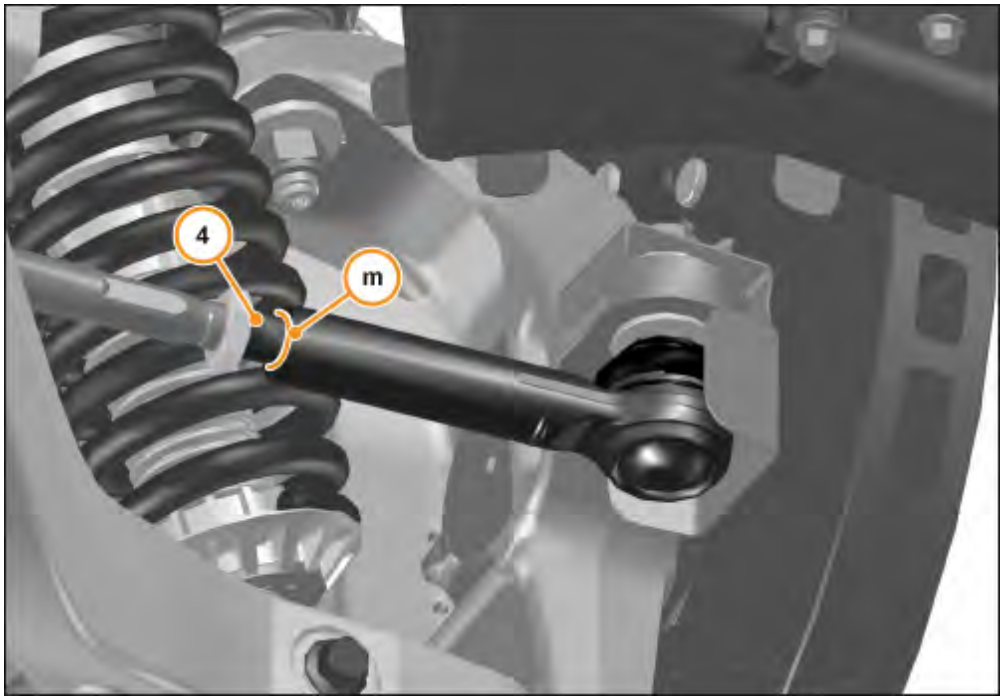

Care Point: Count the number of full rotations while installing the track rod. This will align with the marking made on the steering arm thread (m).

Care Point: Ensure track rod is held with spanner across the machined flats when applying torque to lock nut (3).

Install track rod

1. Install components in reverse order.

2. Carry out steering alignment check. AA-RM-03B03-01-002 - Perform a wheel alignment check

Torque settings

FG03 Chassis / D01 Steering System / Steering System / AA-RM-03D01-01-001 - Remove/install track rod

Description	Dimension	Value
Track rod - steering rack	M14	30 Nm

Instructions

FG03 Chassis / B01 Front Suspension / Front Suspension LH / AA-RM-03B01-02-004 - Remove/install upright - Front

Preparation work

1. AA-RM-02A04-04-007 Secure/lift vehicle on lifting platform.
2. AA-RM-03B03-01-001 Remove/install wheels.
3. AA-RM-03C01-01-002 Remove/install brake - Caliper - Front.
4. AA-RM-02A02-03-005 Remove/install ducts - Brake disc cooling - Front.
5. AA-RM-03C01-01-003 Remove/install brake - Disc - Front.
6. AA-RM-05M02-01-006 Remove/install wheel speed sensor - Front

Remove upright - Front

1. Remove nut (1). M12 70 Nm

   Care Point: Use suitable ball joint separator.

2. Detach track rod ball joint (2) from upright (3).

3. Remove nut (4).

   Care Point: Use suitable ball joint separator.

4. Detach lower wishbone ball joint (5) from upright (3)
5. Remove nut (6).

   Care Point: Observe excentric stepped washer.

   Care Point: Use suitable ball joint separator.

6. Remove upright (3) from upper wishbone ball joint (7).

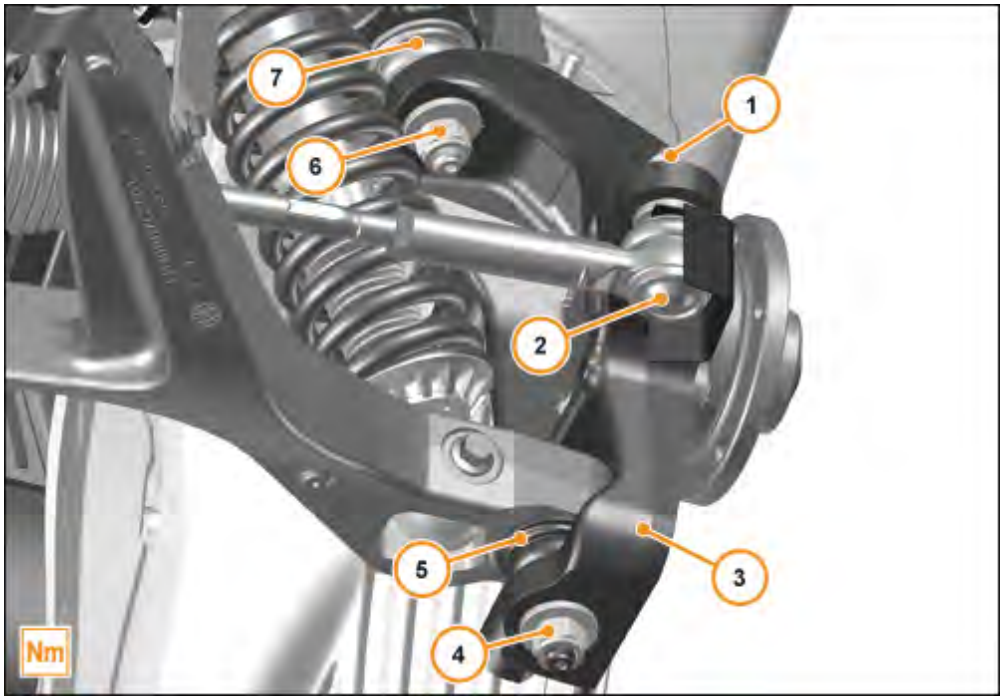

Install upright - Front

Care Point: Use a plain M14 half nut and wind onto the upper and lower ball joint threads. Torque these nuts (5, 6) to M14 60 Nm . Once torque has been achieved, remove slave nuts and fit specified nuts (5, 6). Torque these nuts (5, 6) to M14 100 Nm .

Care Point: If refitting or renewing camber tophat in upright, ensure Loctite 222 is used on the position fixing and a torque value of 1.2 Nm is applied.

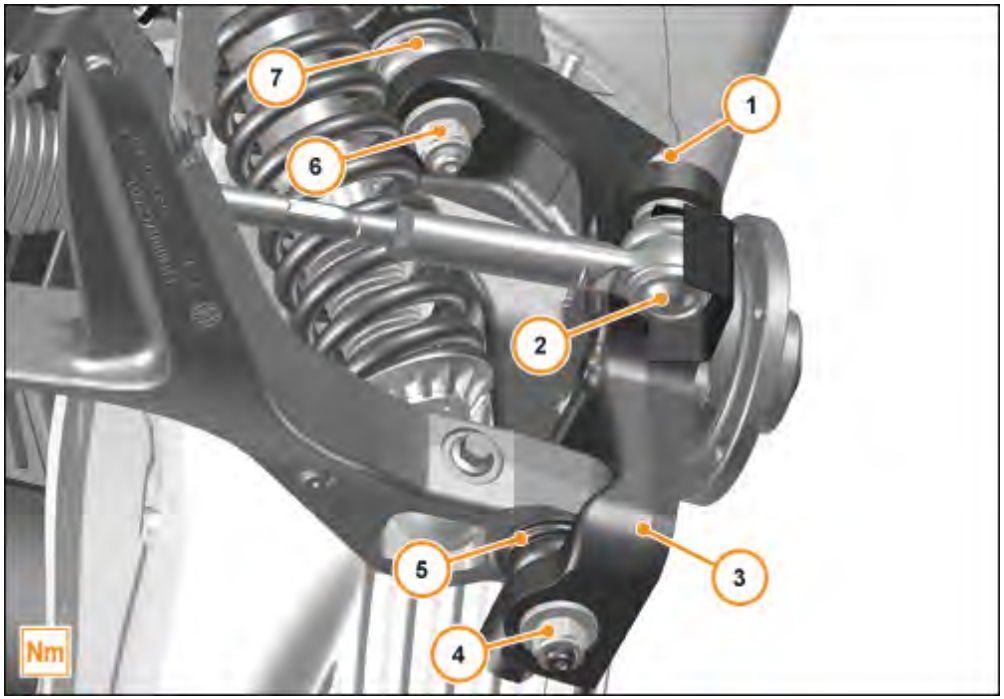

1. Install components in reverse order.

2. Check chassis geometry. AA-RM-03B03-01-002 - Perform a wheel alignment check

   Care Point: Once vehicle is on ground.

3. Apply pressure to top of wheel towards vehicle. If excessive inward movement of wheel is present, the upper ball joint has failed. The wishbone will require replacing.

Torque settings

FG03 Chassis / B01 Front Suspension / Front Suspension LH / AA-RM-03B01-02-004 - Remove/install upright - Front

Description	Dimension	Value
Nut Track rod - Upright	M12	70 Nm
Half Nut wishbone - Upright	M14	60 Nm
Nut wishbone - Upright	M14	100 Nm

Instructions

FG03 Chassis / B01 Front Suspension / Front Suspension LH / AA-RM-03B01-02-001 - Remove/install wheel hub assembly - Front

Preparation work

1. AA-RM-02A04-04-007 Secure/lift vehicle on lifting platform.
2. AA-RM-03B03-01-001 Remove/install wheels.
3. AA-RM-02A02-03-005 Remove/install ducts - Brake disc cooling - Front.
4. AA-RM-03C01-01-002 Remove/install brake - Caliper - Front.
5. AA-RM-03C01-01-003 Remove/install brake - Disc - Front.
6. AA-RM-05M02-01-006 Remove/install wheel speed sensor - Front

Remove wheel hub assembly - Front

1. Remove bolts and washers (1). M12 x 30 70 Nm
2. Remove wheel hub (2).

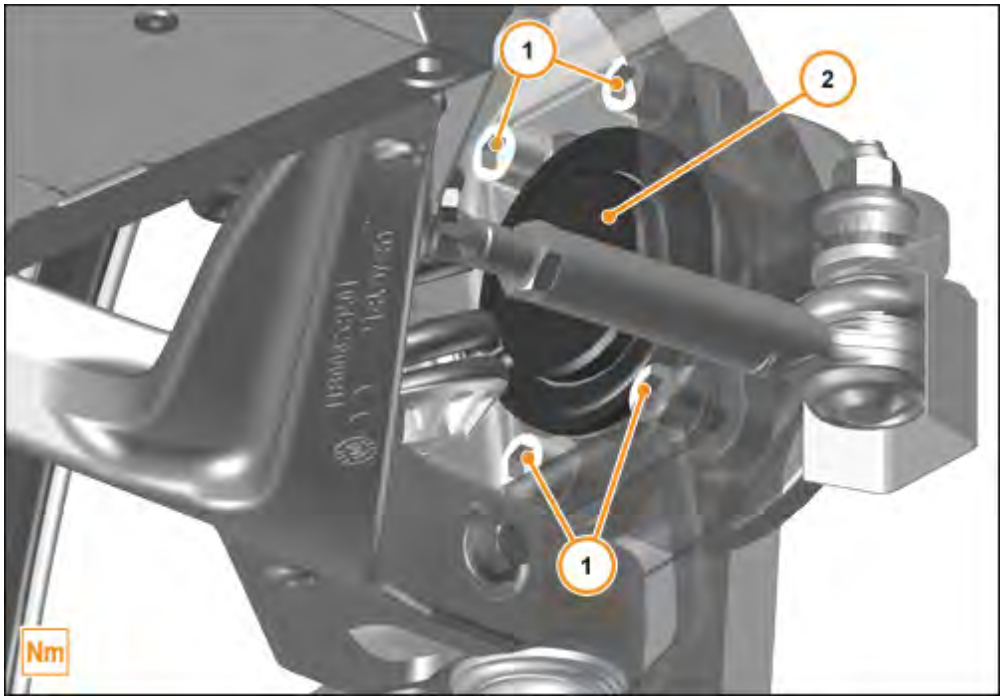

Install wheel hub front

Care Point: Renew hub nut if it has been detached.
Tighten up hub nut to 320 Nm and stave it over.

1. Install components in reverse order.

Torque settings

FG03 Chassis / B01 Front Suspension / Front Suspension LH / AA-RM-03B01-02-001 - Remove/install wheel hub assembly - Front

Description	Dimension	Value
Bolts Hub - Upright	M12 x 30	70 Nm

Instructions

FG03 Chassis / B02 Rear Suspension / Rear Suspension LH / AA-RM-03B02-01-007 - Remove/install tie rod - Rear

Preparation work

1. AA-RM-02A04-04-007 Secure/lift vehicle on lifting platform.

2. AA-RM-03B03-01-001 Remove/install wheels.

3. AA-RM-02A02-03-001 Remove/install wheel arch liner - rear.

Remove tie rod - Rear

Care Point: Use ball joint splitter to separate.

1. Remove nut (1). M12 70 Nm

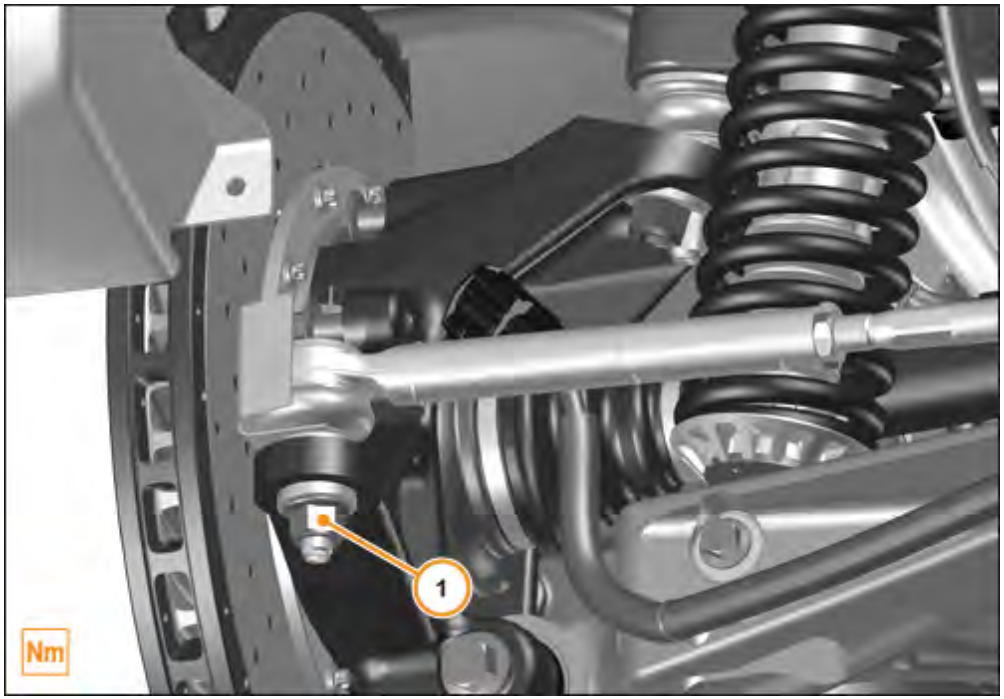

2. Pull back dust cover (2).

3. Unscrew tie rod (3) from aluminium subframe (4). M16 x 1.5 80 Nm
4. Remove tie rod (3).

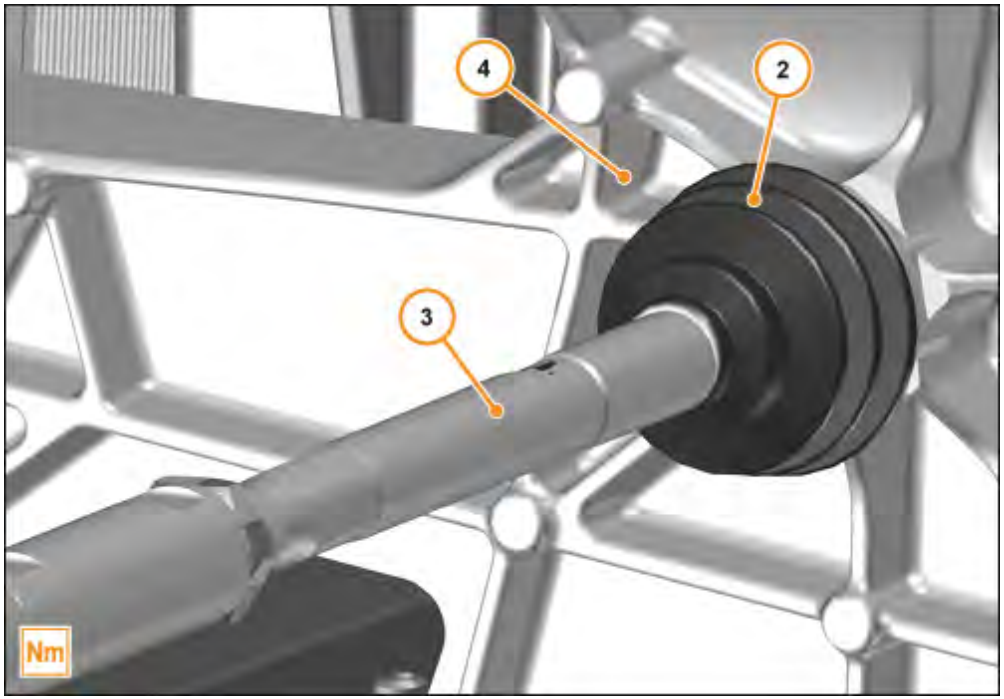

Install tie rod - Rear

Care Point: Apply an initial torque of 70Nm to the tie rod. Then apply a secondary torque of 80Nm. M16 x 1.5 80 Nm

1. Install components in reverse order.

2. Perform geometry check

3. Check chassis geometry AA-RM-03B03-01-002 - Perform a wheel alignment check .

Torque settings

FG03 Chassis / B02 Rear Suspension / Rear Suspension LH / AA-RM-03B02-01-007 - Remove/install tie rod - Rear

Description	Dimension	Value

Nut Tie rod - Upright	M12	70 Nm
Bolt Tie rod - Aluminium subframe	M16 x 1.5	80 Nm
Bolt Tie rod - Aluminium subframe	M16 x 1.5	80 Nm

Instructions

FG03 Chassis / B02 Rear Suspension / Rear Suspension LH / AA-RM-03B02-01-003 - Remove/install upright - Rear

Preparation work

1. AA-RM-02A04-04-007 Secure/lift vehicle on lifting platform.
2. AA-RM-03B03-01-001 Remove/install wheels.
3. AA-RM-03C02-01-002 Remove/install caliper parking brake.
4. AA-RM-03C01-03-001 Remove/install brake caliper - rear.
5. AA-RM-02A02-03-007 Remove/install cooling duct
6. AA-RM-03C01-03-002 Remove/install brake disc - rear.

Remove upright - Rear

1 Remove electronic park brake (EPB) caliper
.bracket bolts.
2 Remove EPB caliper bracket.
.

3 Remove driveshaft nut (1). M26 320 Nm
.

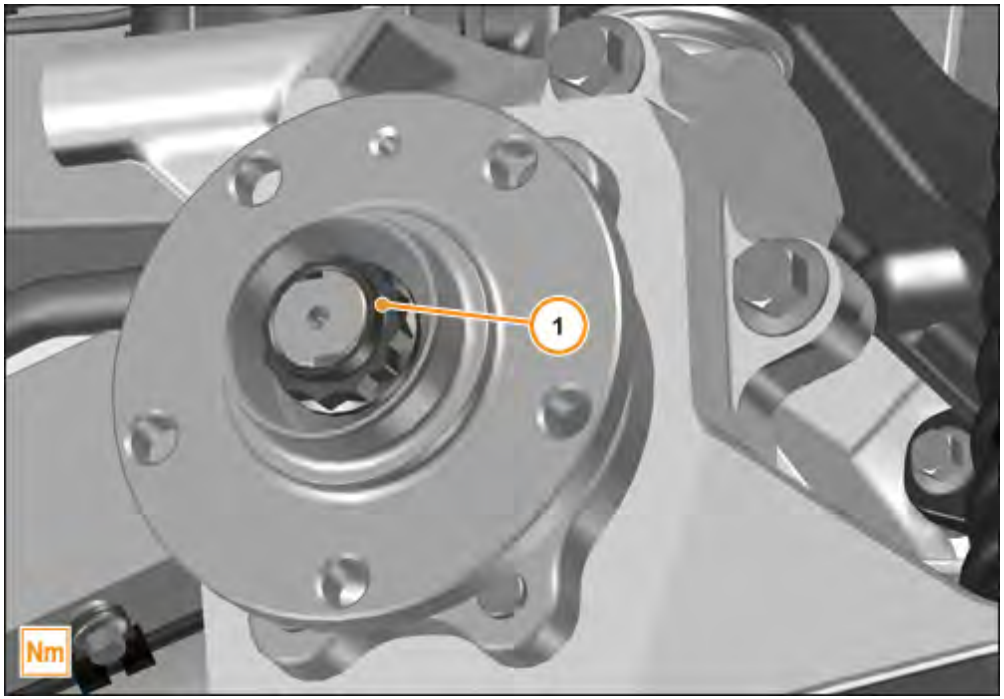

4 Remove nut (2). M12 70 Nm
.

Care Point: Use ball joint separator.

5 Detach track rod from upright.
.
6 Remove bolt (3). M14 x 110 90 Nm
.
7 Remove nut (4).
.

Care Point: Observe excentric stepped washer.

Care Point: Use ball joint separator.

8 Detach upper wishbone (5) from upright (6).
.
9 Remove bolt (3).
.
10 Remove upright - Rear (6).
.

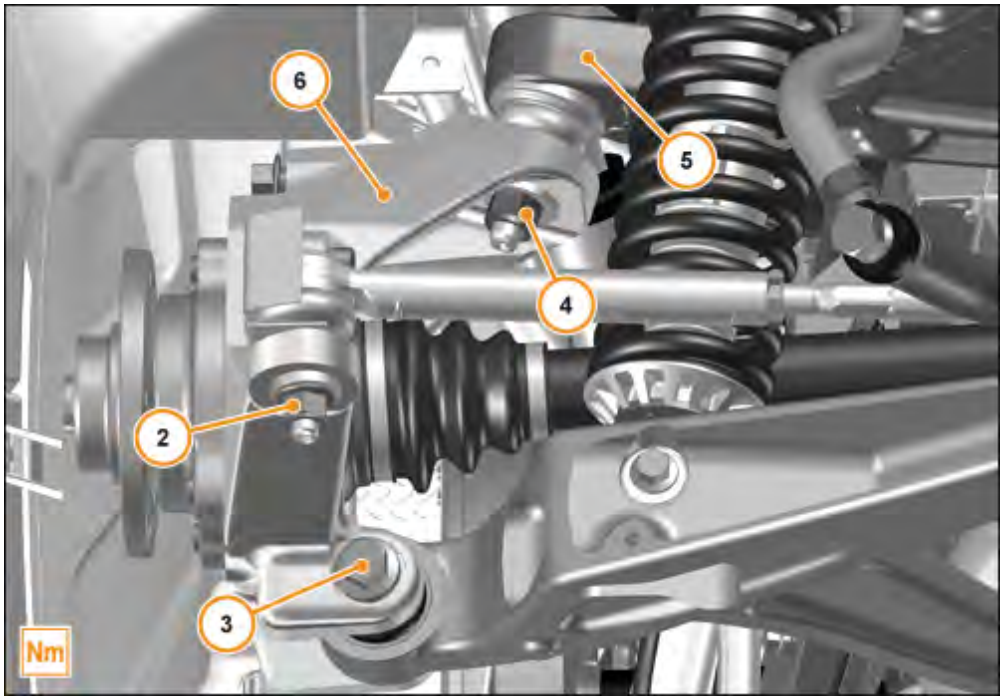

Remove upright - Rear

Care Point: Use a plain M14 half nut and wind onto the upper and lower ball joint threads. Torque these nut (4) to M14 60 Nm . Once torque has been achieved, remove slave nuts and fit specified nut (4). Torque these nut (4) to M14 100 Nm .

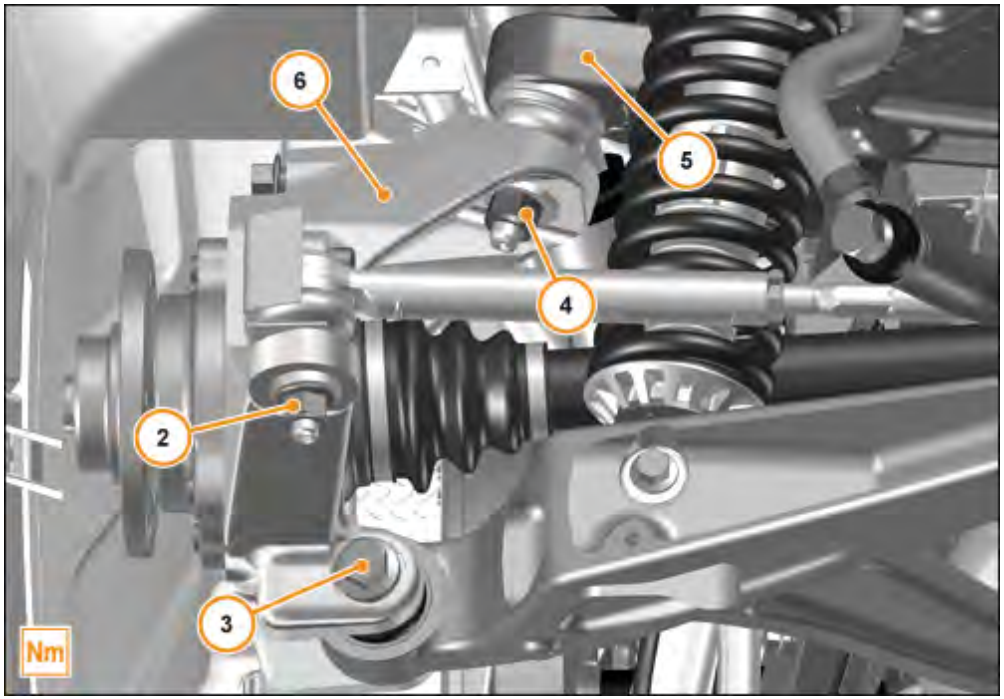

1. Install components in reverse order.

2. Check chassis geometry. AA-RM-03B03-01-002 - Perform a wheel alignment check

   Care Point: Once vehicle is on ground.

3. Apply pressure to top of wheel towards vehicle. If excessive inward movement of wheel is present, the upper ball joint has failed. The wishbone will require replacing.

Torque settings

FG03 Chassis / B02 Rear Suspension / Rear Suspension LH / AA-RM-03B02-01-003 - Remove/install upright - Rear

Description	Dimension	Value
Nut Driveshaft	M26	320 Nm
Nut Tie rod - Upright	M12	70 Nm
Bolt Lower wishbone - Upright	M14 x 110	90 Nm
Half Nut wishbone - Upright	M14	60 Nm
Nut wishbone - Upright	M14	100 Nm

Instructions

FG03 Chassis / B02 Rear Suspension / Rear Suspension LH / AA-RM-03B02-01-004 - Remove/install hub - Rear

Preparation work

1. AA-RM-02A04-04-007 Secure/lift vehicle on lifting platform.
2. AA-RM-03B03-01-001 Remove/install wheels.
3. AA-RM-03C02-01-002 Remove/install caliper parking brake.
4. AA-RM-03C01-03-001 Remove/install brake caliper - rear.
5. AA-RM-02A02-03-007 Remove/install cooling duct
6. AA-RM-05M02-01-007 Remove/install sensor - rear wheel speed
7. AA-RM-03C01-03-002 Remove/install brake disc - rear.
8. AA-RM-03B02-01-003 Remove/install upright.

⚠CAUTION!

Risk of injury when unscrewing micro-encapsulated bolts!
There is an increased risk of injury when unscrewing micro-encapsulated bolts due to the sudden breakaway torque.
Always replace bolts with locking splines, microencapsulated bolts and self-locking nuts after they have been used once.

- Re-cut the mating thread before new micro-encapsulated bolts are screwed in, in order to remove all residue of the old bolt locking compound.

Remove hub - Rear

1. Remove bolts (1). M12 x 30 70 Nm
2. Remove hub (2) from upright (3).

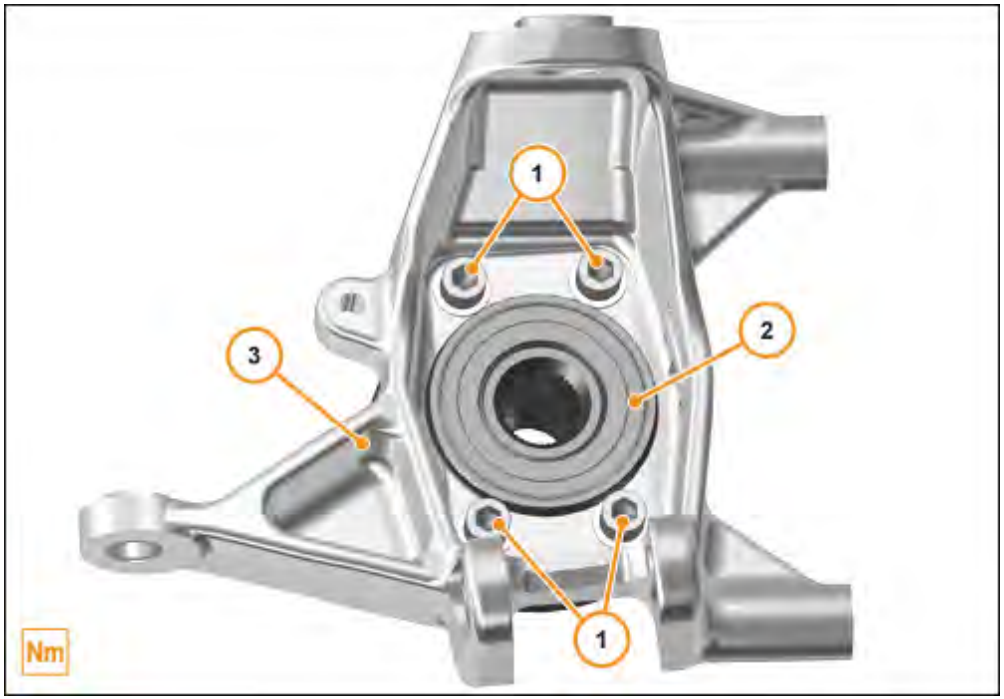

Install hub - Rear

1. Install in reverse order.
2. Check chassis geometry AA-RM-03B03-01-002 - Perform a wheel alignment check .

Torque settings

FG03 Chassis / B02 Rear Suspension / Rear Suspension LH / AA-RM-03B02-01-004 - Remove/install hub - Rear

Description	Dimension	Value
Bolt Wheel hub - Upright	M12 x 30	70 Nm

Instructions

FG03 Chassis / B02 Rear Suspension / Rear Suspension LH / AA-RM-03B02-01-006 - Remove/install drop link

Preparation work

1. AA-RM-02A04-04-007 Secure/Lift vehicle on lifting platform.

2. AA-RM-03B03-01-001 Remove/Install wheels.

Remove drop link

1. Detach wheel arch liner in mounting area.

Care Point: Mark upper side of drop link. Convex washers on left hand side only. Plain washer on right hand side.

2. Remove bolts (1). M14 x 60 100 Nm

3. Remove drop link (2).

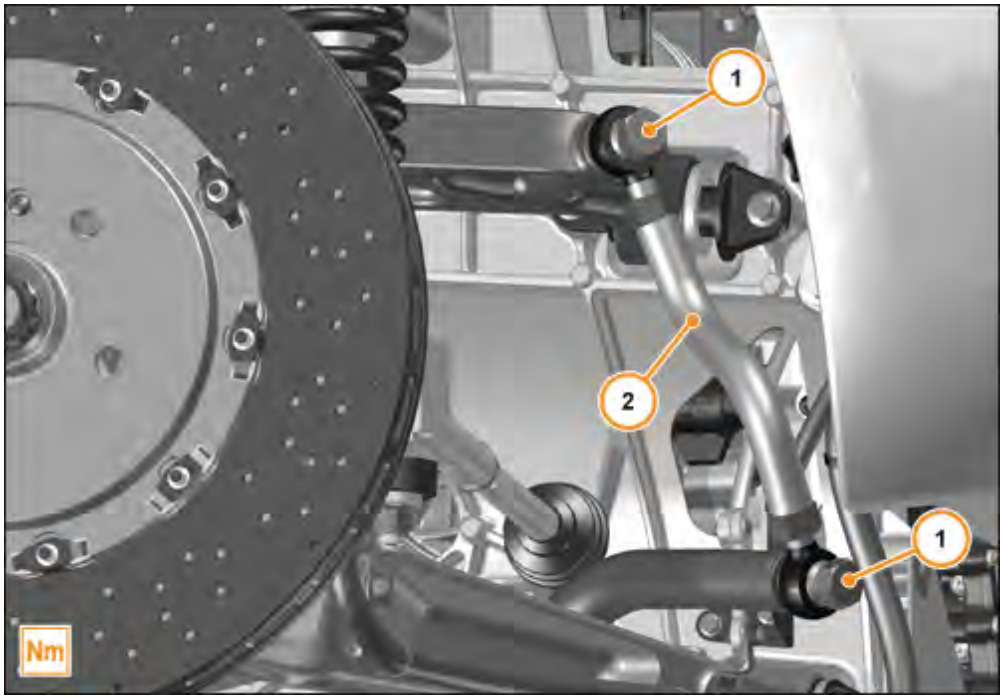

Install drop link

Care Point: During assembly do not apply tension to Z-bar.

1. Install in reverse order.

Torque settings

FG03 Chassis / B02 Rear Suspension / Rear Suspension LH / AA-RM-03B02-01-006 - Remove/install drop link

Description	Dimension	Value
Bolt Drop link	M14 x 60	100 Nm

Instructions

FG03 Chassis / B02 Rear Suspension / Z Bar Assembly / AA-RM-03B02-04-001 - Remove/install Z-bar

Preparation work

1. AA-RM-02A04-04-007 Secure/Lift vehicle on lifting platform.

2. AA-RM-03B03-01-001 Remove/install wheels.

3. AA-RM-02A04-04-001 Remove/install floor panel engine/fuel tank.

4. AA-RM-02A04-04-004 Remove/install rear diffusor.

Remove Z-bar

1. Detach wheel arch liner in mounting area on both sides.

Care Point: Convex washers on left hand side only. Plain washer on right hand side.

2. Remove bolts (1) on both sides of Z-bar. M14 x 60 100 Nm

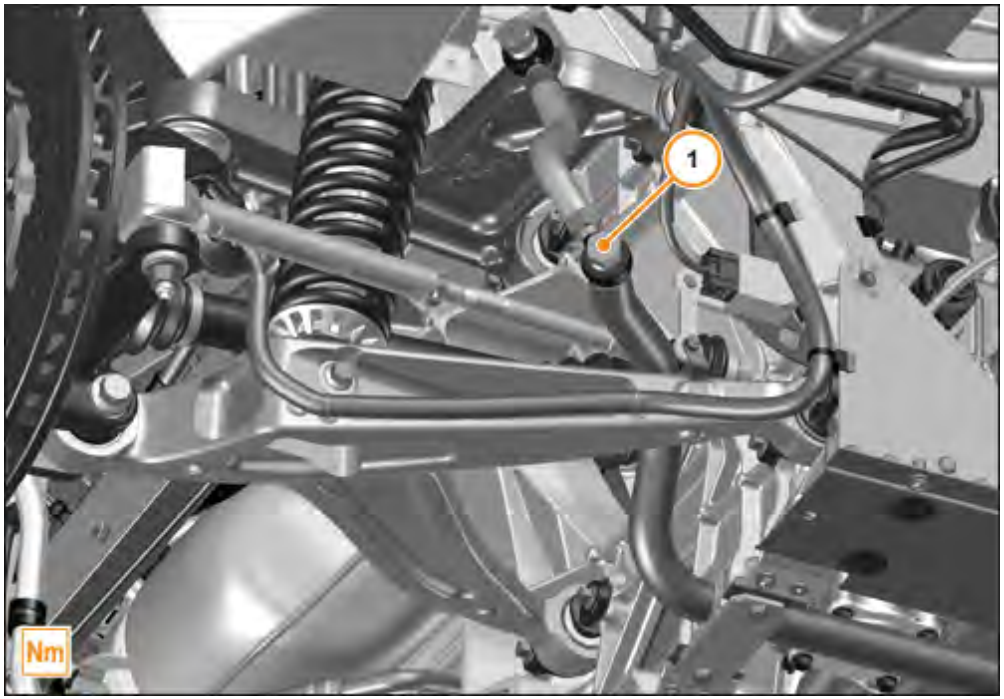

Care Point: Observe the position of shims.

3. Remove bolts (2). M8 x 20 23 Nm
4. Remove Z-bar (3).

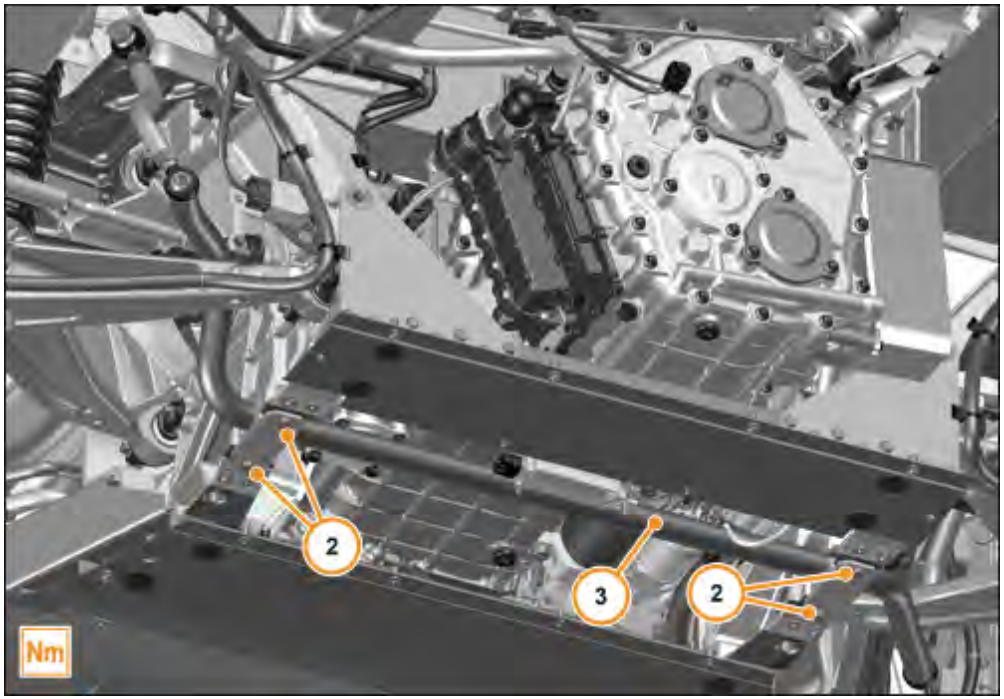

Install Z-bar

1. Install components in reverse order.

Torque settings

FG03 Chassis / B02 Rear Suspension / Z Bar Assembly / AA-RM-03B02-04-001 - Remove/install Z-bar

Description	Dimension	Value
Bolt Drop link	M14 x 60	100 Nm
Bolts Z-bar - Floor	M8 x 20	23 Nm

Instructions

FG03 Chassis / B03 Wheels Tyres / Wheel Assembly / AA-RM-03B03-01-002 - Perform a wheel alignment check

1 Ensure the vehicle is on level ground.

Care Point: Apply the following adjustments to the ride height figures if the tank is full with driver: Front -2mm / Rear -3mm.

Care Point: Apply the following adjustments to the ride height figures if the tank is empty with driver: Front + 2mm / Rear + 3mm.

Care Point: Driver weight range is between 70kg - 80kg

2 Ensure no additional weight is in the luggage compartment area.

Care Point: Ride heights are generally measured to the bottom of the flat floor on the front and rear axle lines.

Care Point: Specified ride heights - 120mm front, 140mm rear (with driver and half tank of fuel) Tolerance: +/-2mm.

3 Ensure vehicle is at correct ride height.

Care Point: Tyre pressure: Front (19in Wheels) 2.0 Bar, Rear (20in Wheels) 2.2 Bar.

4 Ensure the vehicle wheels are pointed in the straight ahead position.

5 Ensure the tyres are a matched axle set and at the correct pressures.

6 Ensure the fuel tank is to specified level (36 litres).

7 Ensure there are no leaks in the PAS system.

Care Point: Ensure the equipment manufacturers instructions are followed.

Point:

Care Point: Toe Front = -0°1´ toe out (If machine uses decimal system = -0°017) (0mm on 19” wheel). Toe Rear = 0°04´ toe in (If machine uses decimal system = 0°067) (0.5mm on 20” wheel). Tolerance +/- 01´ per wheel.

Care Point: Camber (at nominal ride height) Front = -1.5°, Rear = -1.0°, Tolerance +/- 0.1°.

Care Point: Caster is not adjustable, but its nominal setting is between 4° – 5° positive.

Care Point: Carry out camber adjustment using the camber adjustment tophat on the upright.

8 Check for signs of wear or damage to the suspension components.
.
9 Carry out vehicle alignment.
.
10 Connect McLaren Diagnostic System, proceed to Diagnostic Toolbox within **Steering Angle Sensor (SAS)**.
.
11 Access Quick Test section check if update is available.
.
12 Proceed with Flashing if required.
.
13 Access Sequences section.
.
14 Carry out Fine Tune Zero Position procedure.
.
15 Read, delete error memory.
.
16. Check functionality.

Instructions

FG02 Body Systems / A02 Exterior Trim Lighting Wipers / Luggage Cell Ducts Wheelarch Liners / AA-RM-02A02-03-001 - Remove/install wheel arch liner - Rear

Preparation work

1. AA-RM-02A04-04-007 Secure/lift vehicle on lifting platform.

2. AA-RM-03B03-01-001 Remove/Install wheel.

Remove wheel arch liner - Rear

1. Remove bolts (1). M6 x 16 5 Nm

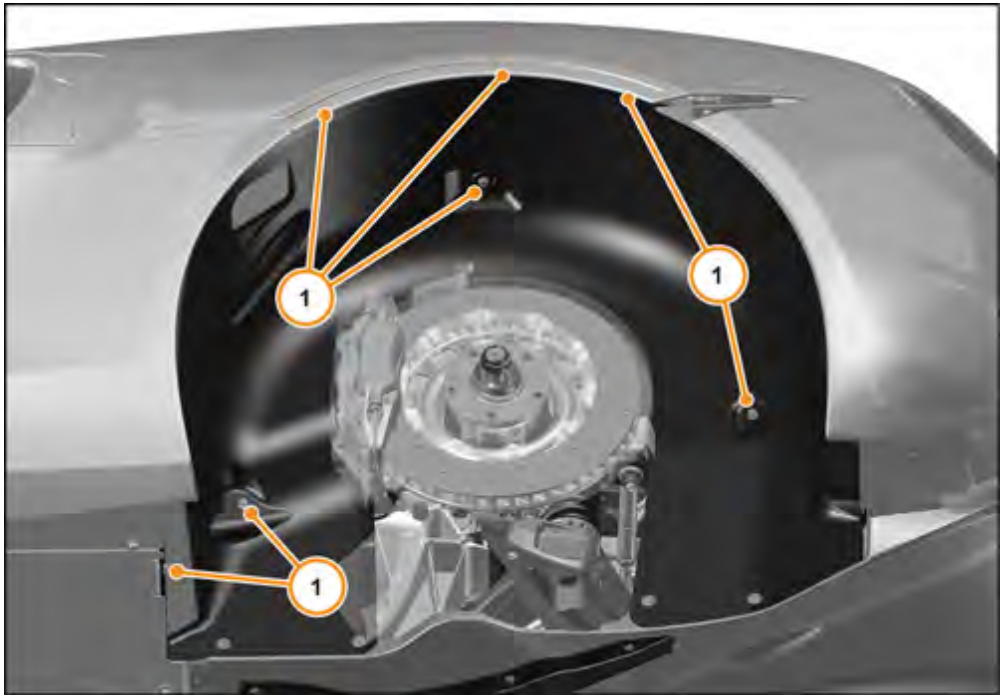

2. Remove bolts (2). M6 x 16 5 Nm

3. Partially remove wheel arch liner.

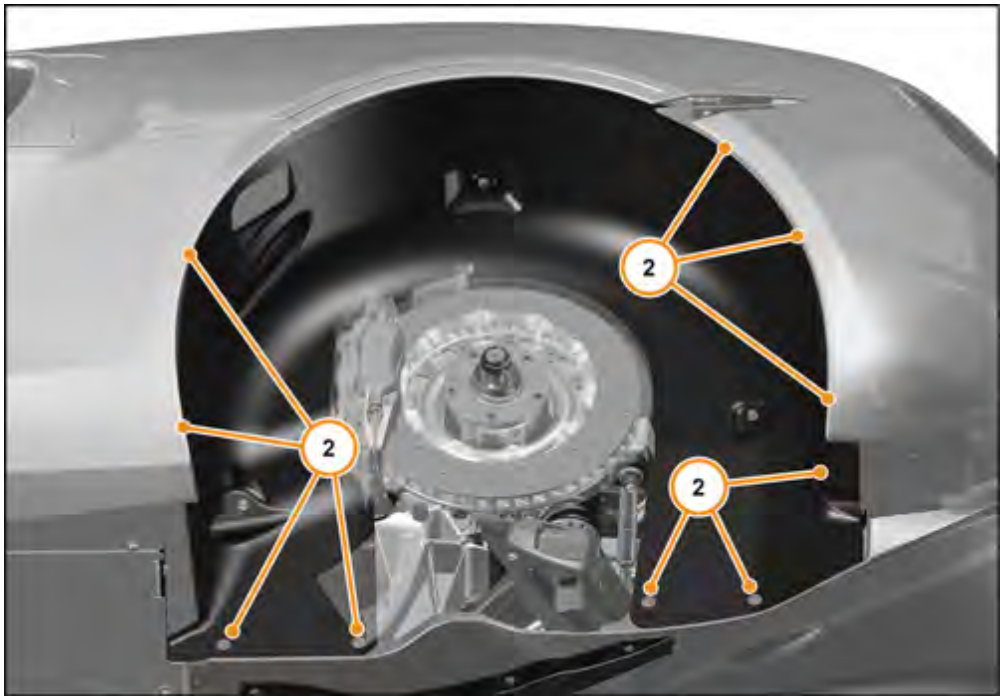

4. Disconnect tyre pressure monitor trigger electrical connector (4).
5. Remove wheel arch liner (5).

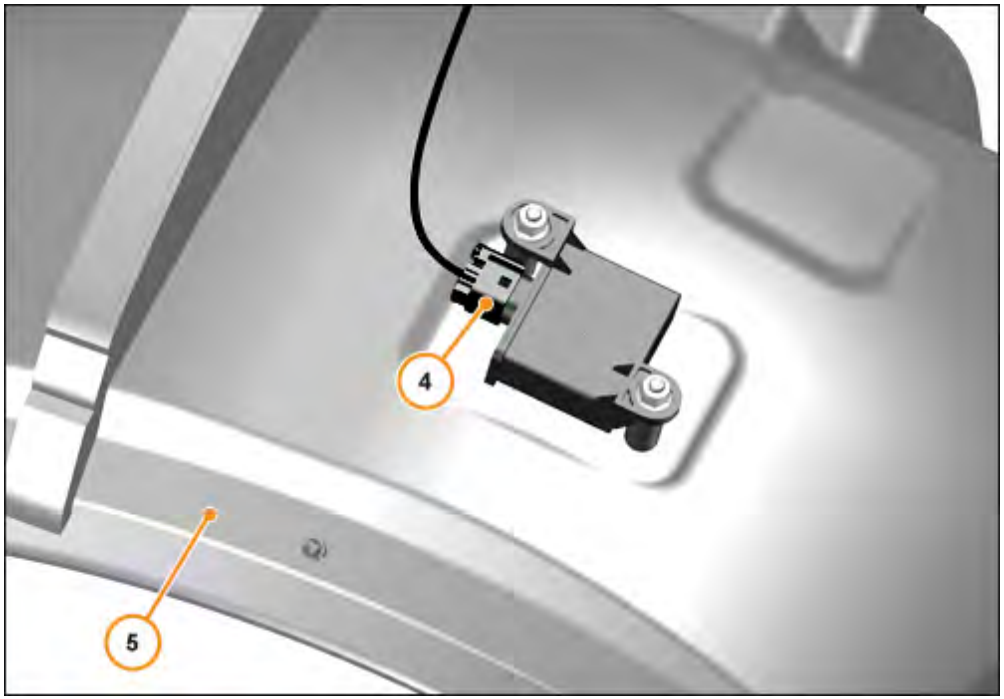

Install wheel arch liner - Rear

Care Point: Ensure tyre pressure monitor trigger electrical connector is located correctly.

1. Install components in reverse order.

Torque settings

FG02 Body Systems / A02 Exterior Trim Lighting Wipers / Luggage Cell Ducts Wheelarch Liners / AA-RM-02A02-03-001 - Remove/install wheel arch liner - Rear

Description	Dimension	Value
Bolt - Wheel arch liner	M6 x 16	5 Nm
Bolt - Wheel arch liner	M6 x 16	5 Nm

Instructions

FG04 Powertrain / F02 Oil System Engine / Oil System Engine / AA-RM-04F02-01-011 - Drain/fill fluid - Engine oil

Preparation work

1. AA-RM-02A04-04-007 Secure/lift vehicle on lifting platform

2. AA-RM-02A04-04-001 Remove/install floor panel - engine/fuel tank

Drain fluid - Engine oil

1. Remove cover (1).

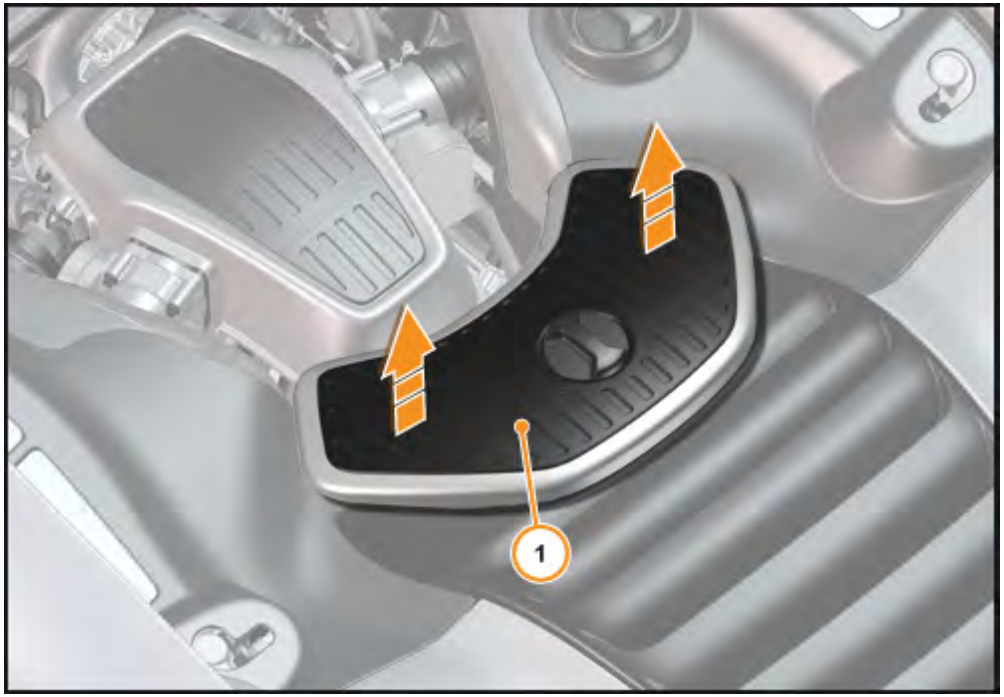

Care Point: Ensure header tank clamps do not drop into the engine bay.

2. Remove bolts with washers (2). M6 x 16 6 Nm

Care Point: Use 10mm flexi-head ratchet spanner.

Care Point: Spacer is fitted between bracket and nut. Ensure this does not fall into the engine bay.

Care Point: Ensure grommet remains in place on header tank bracket.

3. Remove nut (3). M6 6 Nm

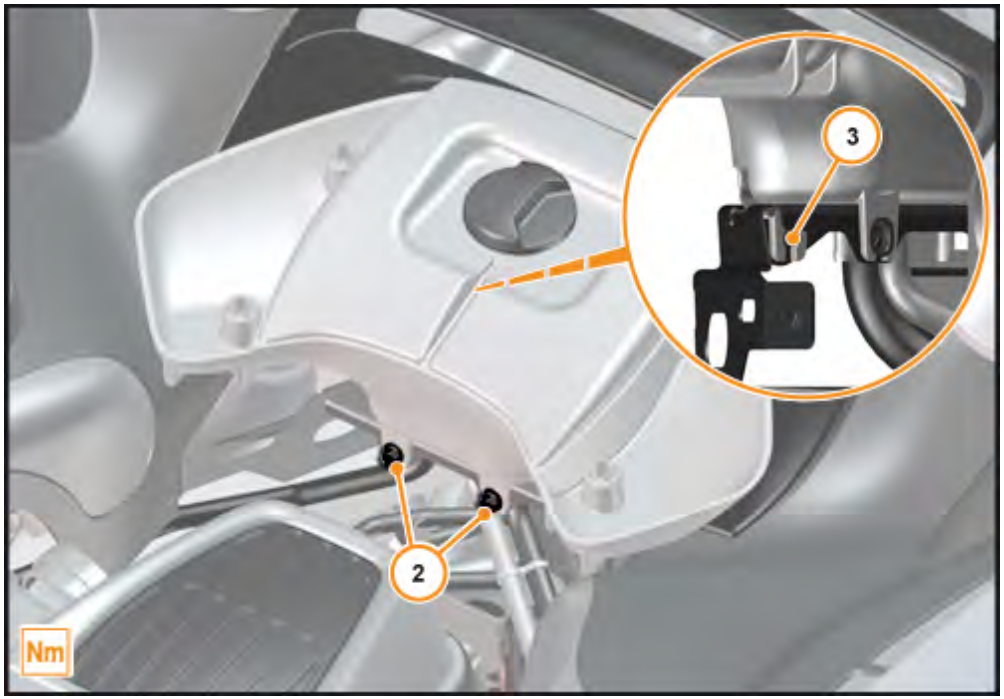

Care Point: Ensure that the hoses connected to the coolant reservoir do not become detached, put under high tension, or become damaged during detachment and moving of the coolant reservoir to gain access to oil filter cap. Protect the area sufficiently before carrying out this step.

4. Remove oil filter cap (4). 25 Nm

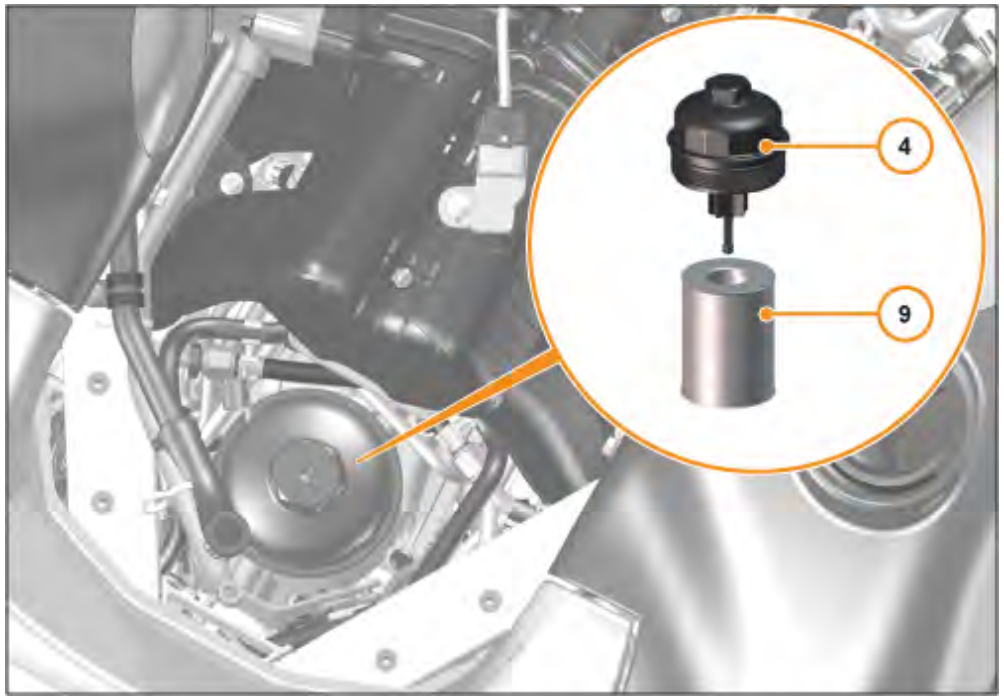

Care Point: Use a suitable container to catch the excess fluid.

Care Point: Drain oil whilst at a warm temperature.
Allow oil to drain for at least 15 minutes.

Care Point: Oil must also be drained from the turbocharger oil return hoses. AA-RM-04F01-01-035 - Remove/ install turbo charger oil return hose Only disconnect the oil return hoses from the engine ladderframe. Renew O-ring on the oil return hose if it has become damaged.

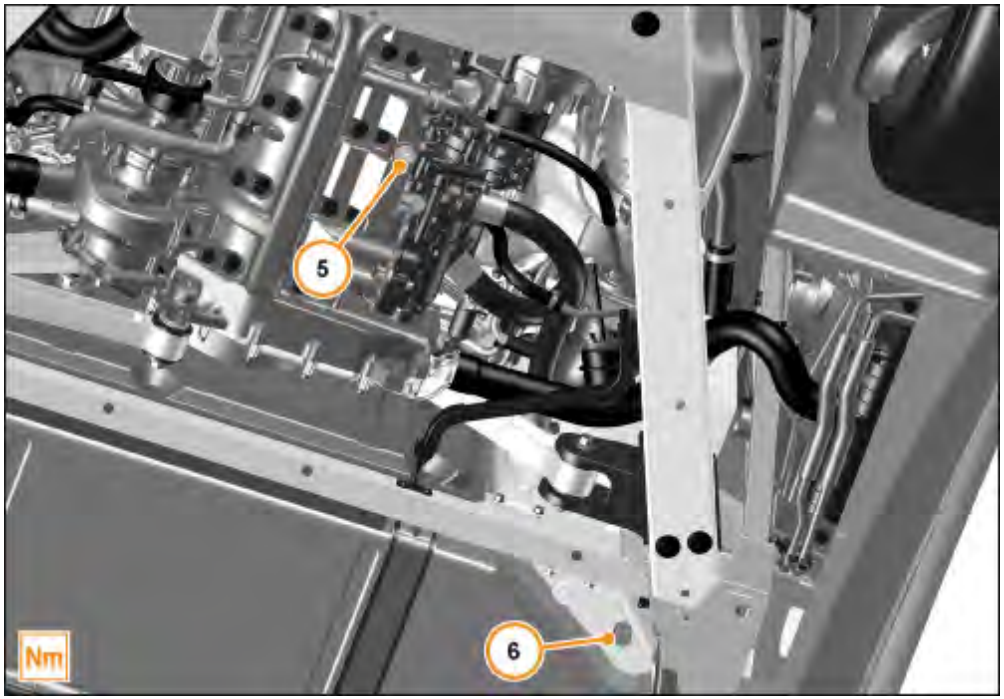

5. Remove plug (5). T50 24 Nm
6. Remove bolt (6). M14 18 Nm
7. Drain engine oil.
8. Remove oil filter (9).

Fill fluid - Engine oil

Care Point: Filter cap torque figure is embossed on the cap. 25 Nm

1 Replace both O-rings (7).
.
2 Replace washers on tank bolt (6).
.
3 Renew sump plug incl. washer (5).
.
4 Install plug and bolt in reverse order.
.
5 Install oil filter (9) and filter cap (4).
.

6 Remove oil filler cap (8).

Care Point: Add no more than the specified quantity of oil to the tank at any one time.
Do not choke the filler tube with oil under any circumstances.

Care Point: Do not put more than 6.8 litres of oil into the system. If this quantity has been achieved with no movement to the oil level gauge, please give the vehicle a complete check of the oil system including use of the McLaren Diagnostic System. Under no circumstances should the above mentioned quantity be exceeded.

7 Fill up engine oil slowly using a funnel. Mobil 1 – 0W40

8 Check oil level. AA-RM-04F02-01-007 - Check oil level

Care Point: Ensure oil filler cap is fitted correctly. The cap should align parallel with the vehicle (Front to back).

9 Install oil filler cap (8).

10 Install components in reverse order.

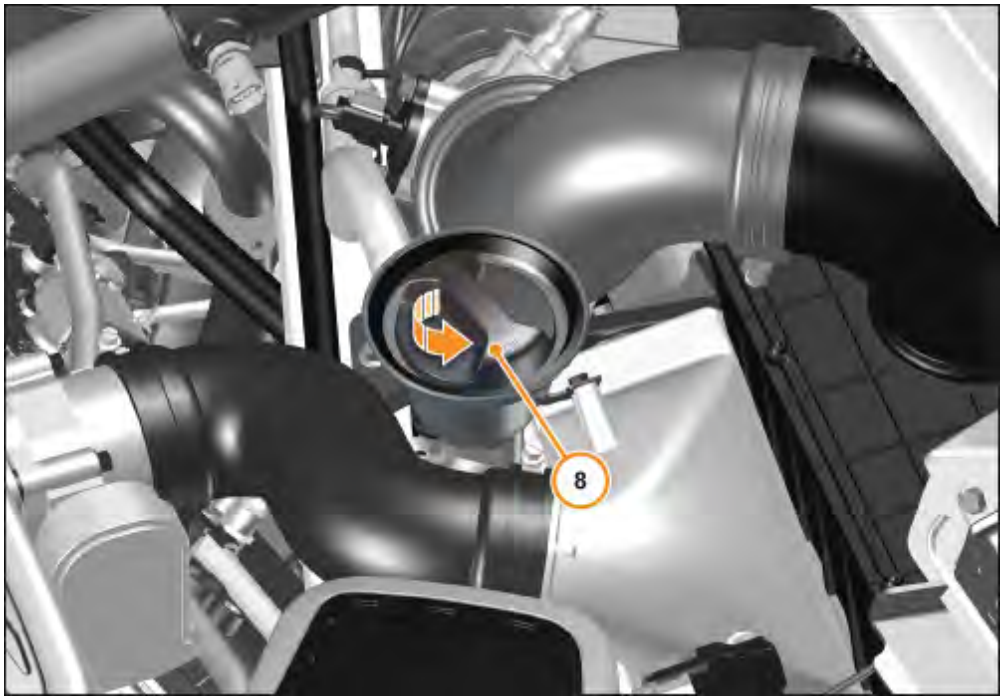

Torque settings

FG04 Powertrain / F02 Oil System Engine / Oil System Engine / AA-RM-04F02-01-011 - Drain/fill fluid - Engine oil

Description	Dimension	Value

Bolt Reservoir coolant - Bracket	M6 x 16	6 Nm
Nut Reservoir coolant - Bracket	M6	6 Nm
Oil filter cap - Engine		25 Nm
Plug engine oil drain - engine	T50	24 Nm
Bolt engine oil drain - oil tank	M14	18 Nm
Oil filter cap - Engine		25 Nm

Instructions

FG04 Powertrain / F01 Power Unit / Power Unit / AA-RM-04F01-01-035 - Remove/install turbo charger oil return hose

Preparation work

1. AA-RM-02A04-04-007 Secure/lift vehicle on lifting platform
2. AA-RM-02A04-04-001 Remove/install floor panel - Engine/fuel tank

Remove turbo charger oil return hose

WARNING!

Risk of burning and fire when handling hot or glowing objects!

Unprotected contact with hot or glowing objects can cause severe burns to the skin and eyes. If glowing objects come into contact with water, hot steam or hot splashing water this can result in severe skin and eye burns. Severe and possibly permanent injuries can result if hot or glowing objects come into contact with unprotected skin or eyes. Fire can result if glowing objects come into contact with flammable materials or substances.

Wear protective clothing, safety glasses and heat resistant gloves.

- Avoid sparks and keep objects away from flammable materials and substances when handling glowing objects.

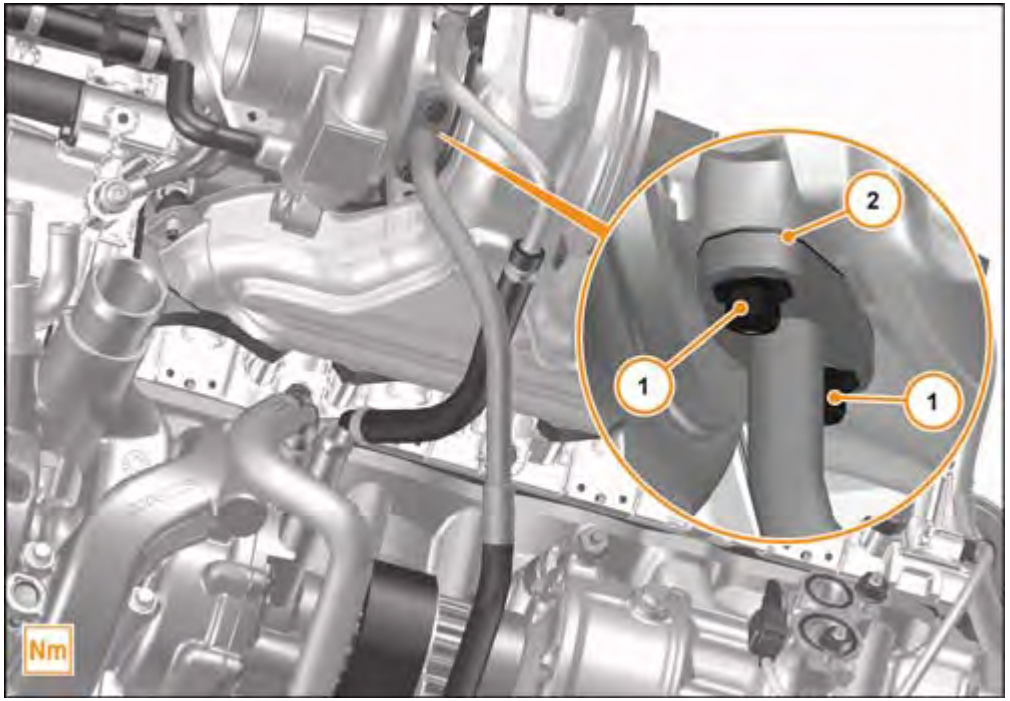

1. Remove bolts (1). M6 x 16 10 Nm
2. Remove paper gasket (2).

3.

Care Point: When removing turbocharger oil return hose, catch oil in suitable container.

4. Remove turbocharger oil return hose (4).

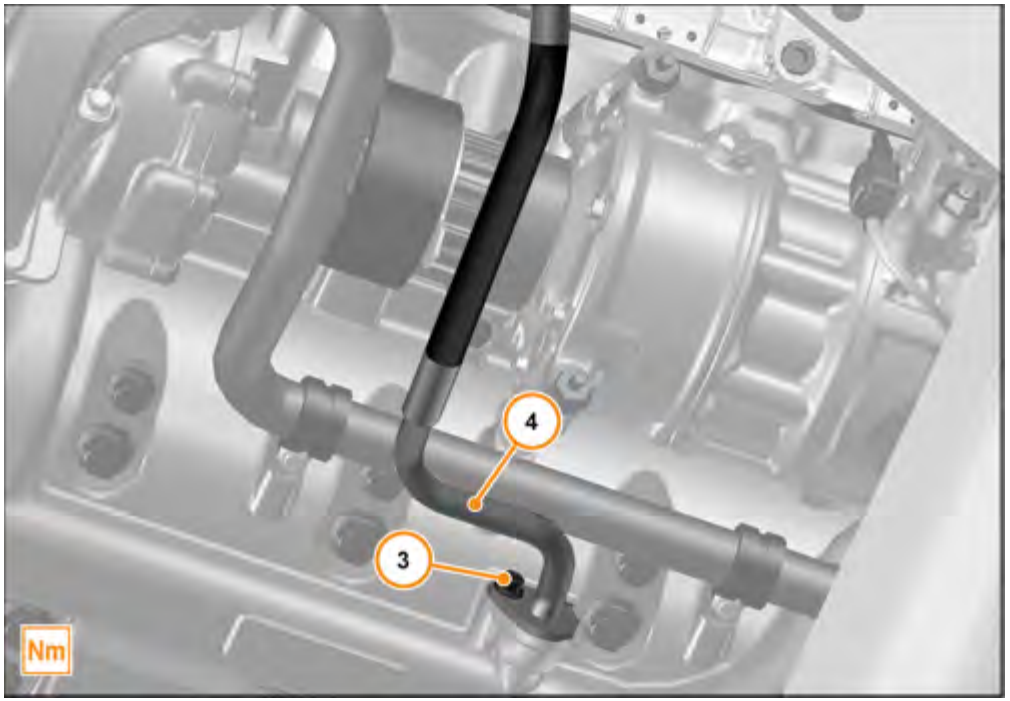

Install turbocharger oil return hose

Care Point: Clean sealing face of old gasket area.

Replace oil with the exact quantity that was removed.

Replace paper gasket.

Replace o-ring seal if damaged. P80 THIX

If new hose is being fitted, this will already be fitted with an o-ring and paper gasket.

1. Install components in reverse order.
2. Check engine for leaks.
3. Check oil level. AA-RM-04F02-01-007 - Check oil level

Description	Dimension	Value

Bolt Oil drain pipe - Turbo charger/ engine	M6 x 16	10 Nm
Bolt Oil drain pipe - Turbo charger/ engine	M6 x 16	10 Nm

Instructions

FG04 Powertrain / F01 Power Unit / Air Intake System / AA-RM-04F01-02-002 - Remove/install air filter

Preparation work

1. AA-RM-02A04-04-007 Secure/lift vehicle on lifting platform

2. AA-RM-03B03-01-001 Remove/Install wheels

3. AA-RM-02A02-03-001 Remove/Install wheel arch liner – Rear

Remove air filter

1. Remove bolts (1) M5 x 16 3 Nm .

2. Remove airbox access hatch (2).

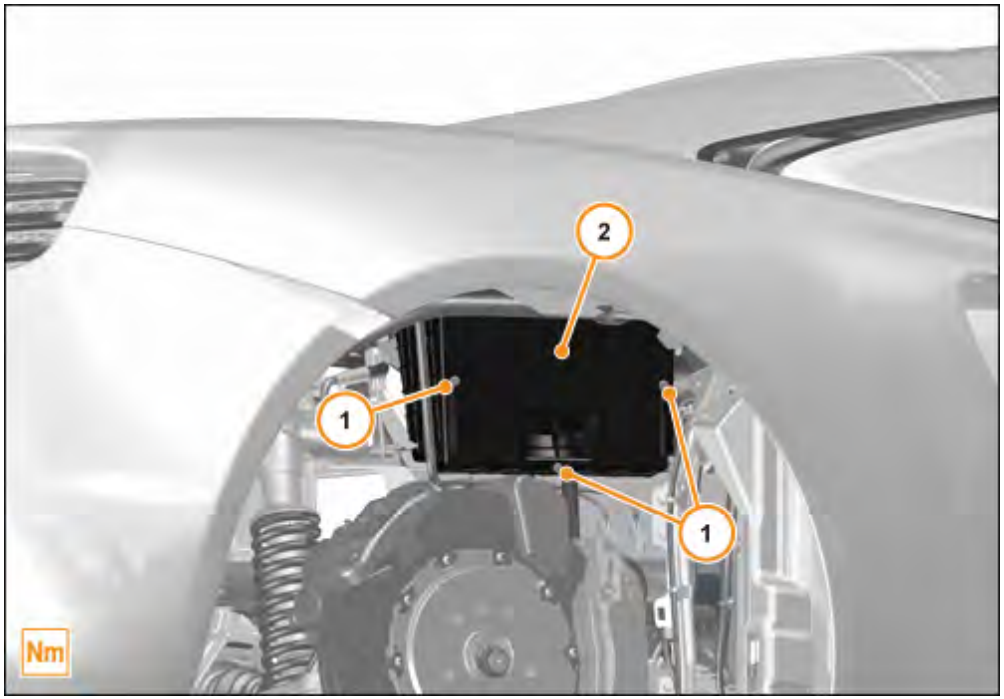

3. Remove air filter (3).

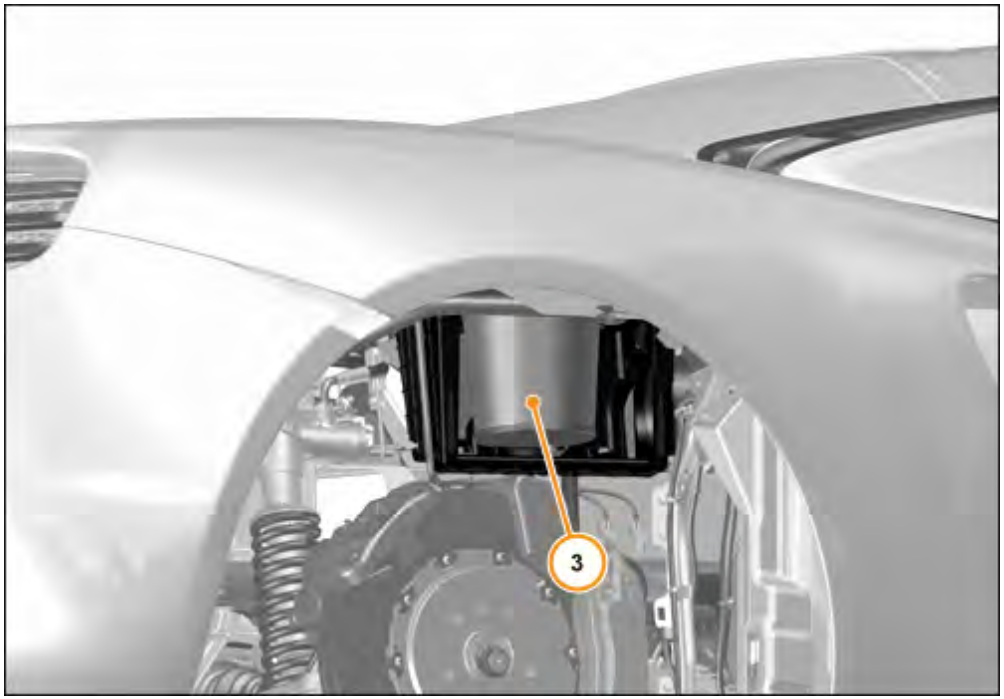

Install air filter

Care Point: Ensure filter and airbox are clean and free of debris.

1. Install components in reverse order.

Torque settings

FG04 Powertrain / F01 Power Unit / Air Intake System / AA-RM-04F01-02-002 - Remove/install air filter

Description	Dimension	Value
Bolt - Airbox service panel	M5 x 16	3 Nm

Instructions

FG03 Chassis / L01 Cooling System / Engine Radiator / AA-RM-03L01-01-005 - Drain/fill fluid - coolant

Preparation work

1. AA-RM-02A04-04-007 Secure/lift vehicle on lifting platform

2. **Care Point:** Up to MY14
   AA-RM-02A04-04-002 Remove/install floor panel - Front
3. **Care Point:** MY15 onwards
   AA-RM-02A04-04-002 Remove/install floor panel - Front
4. AA-RM-02A04-04-001 Remove/install floor panel - Engine/fuel tank

WARNING!

Risks of injury and poisoning when working with coolant!
When the engine is warm, the cooling system is pressurized. If the cooling system is opened suddenly, there is a risk of scalding from hot coolant which splashes out.
If coolant is swallowed, symptoms of poisoning such as headaches, dizziness, stomach pain, respiratory paralysis, unconsciousness, vomiting and cramps can occur.
Wear protective gloves, protective clothing and eye protection.

- Allow cooling system to cool down to a coolant temperature of less than 60 °C.
- Open cap of cooling system slowly; turn a conventional coolant cap as far as the first detent and turn a screwed coolant cap approx. 1/2 turn and release the pressure.
- Do not put coolant in beverage containers.

Care Point: Ensure vehicle is cold before commencing work.

Drain fluid - coolant

1. Remove coolant reservoir cap (1).

Care Point: Use a suitable container to catch the coolant.

2. Detach clamps (2, 4).

3. Detach coolant hoses (3, 5) from water pump and front cover.

Care Point: Use a suitable container to catch the coolant.

4. Remove clamp (6) right hand side and left hand side.
5. Detach coolant hoses (7) right hand side and left hand side from low temperature radiator.

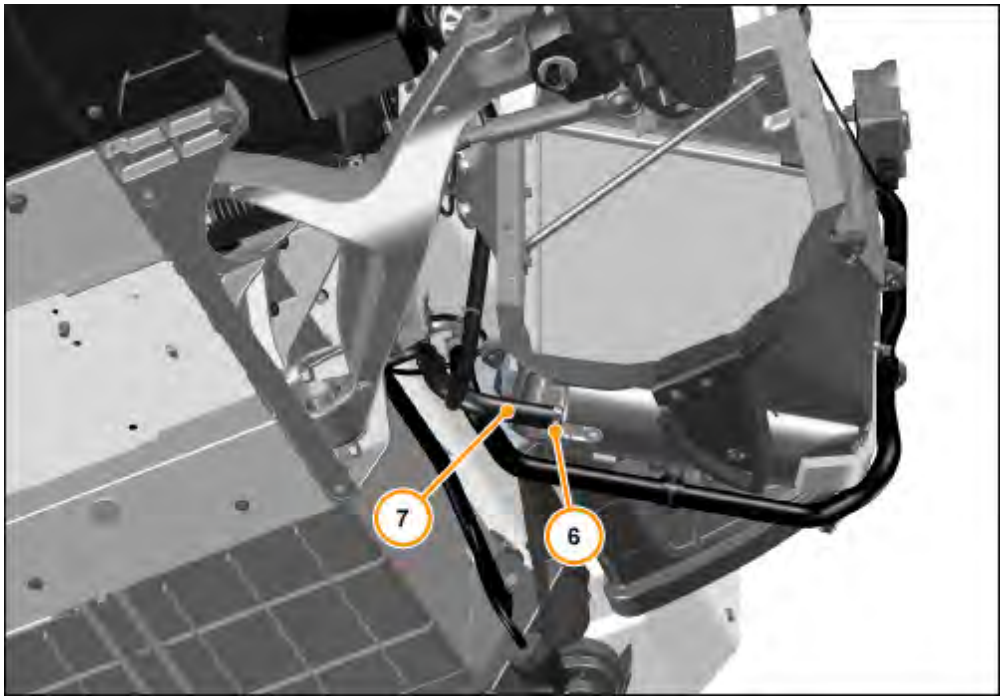

Fill fluid - coolant

Care Point: Renew Oetiker clips on coolant hoses.
Ensure Oetiker clip is positioned just outside the positioning mark (furthest from engine block).

1 Install all coolant hoses in reverse order.
.

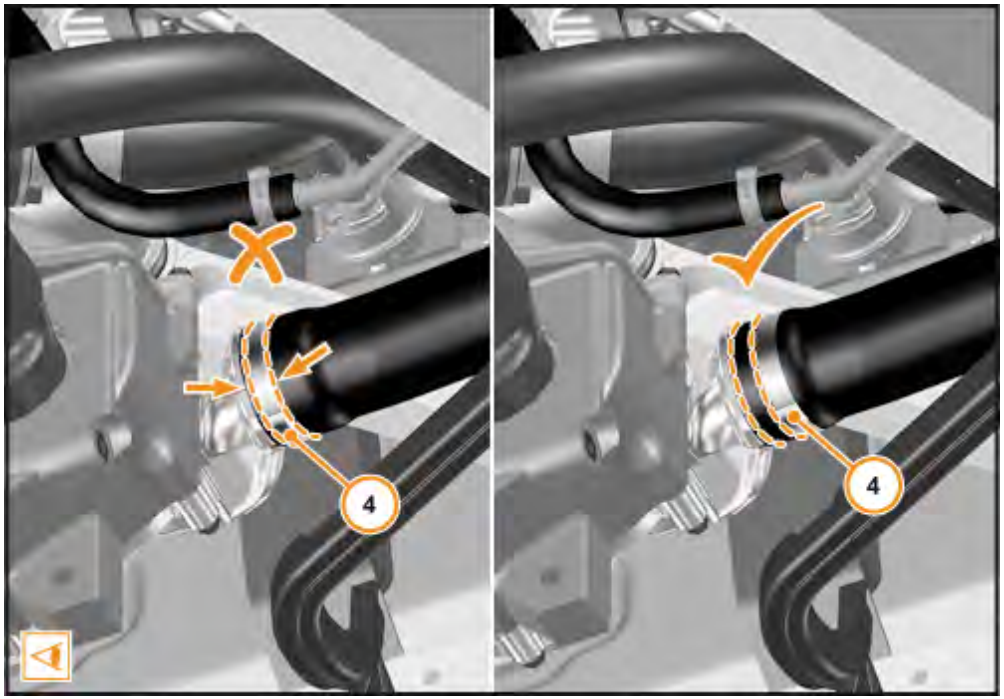

Care Point: Maximum fill on a dry vehicle is 25 litres of coolant (mix ratio of 50:50 with water).

Care Point: Use MOBIL 1 Anti Freeze EXTRA .

Care Point: Ensure vacuum box is in a higher position than the coolant reservoir throughout the filling procedure.

Care Point: Ensure all relevant Personal Protective Equipment (PPE) is worn when carrying out this procedure (gloves, goggles, etc).

2 Attach adaptor to coolant reservoir (8).
.
3 Connect vacuum pump to coolant fill adaptor
.8).
4 Connect vacuum box to coolant fill adaptor
.9).

5 Close all valves on vacuum box (Venturi 10, Top 11, Lower 12, Fill 13).

6 Attach air line to top box connection (14).

7 Open top and lower valves on the vacuum box (11, 12).

Care Point: Do not exceed a vacuum of 0.5 bar vacuum at this stage.

8 Gradually open Venturi valve (10) on vacuum box to generate vacuum in system.

Care Point: Vacuum should not drop once top valve (11) is closed. If the vacuum cannot be held, please check system for leaks.

9 Close top valve (11) and ensure system can hold a vacuum.

10 Release vacuum by closing Venturi valve (10) and opening top valve (11).

11 Close lower valve (12).

Care Point: Place open end of filler tube in to separate coolant filled container. Please ensure a minimum of 10 litres of coolant (50:50 mix with water) is in the separate container.

12 Connect filler tube (15) to fill valve (13).

13 Open filler valve (13).

Care Point: Only fill vacuum box to half way point.

14 Gradually open Venturi valve (10) to draw coolant mix into vacuum box.

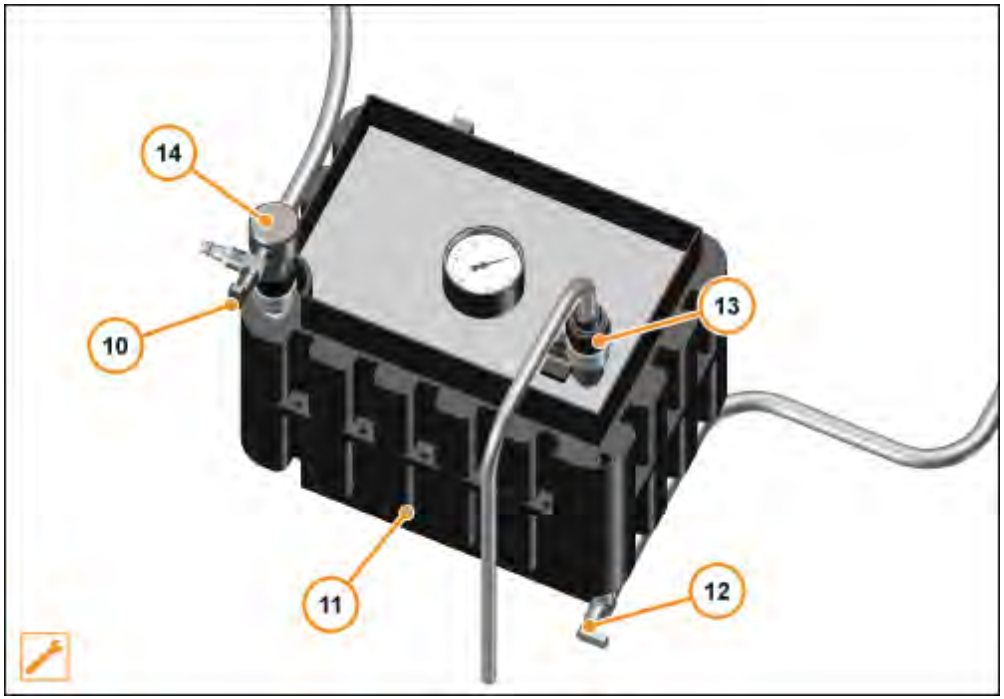

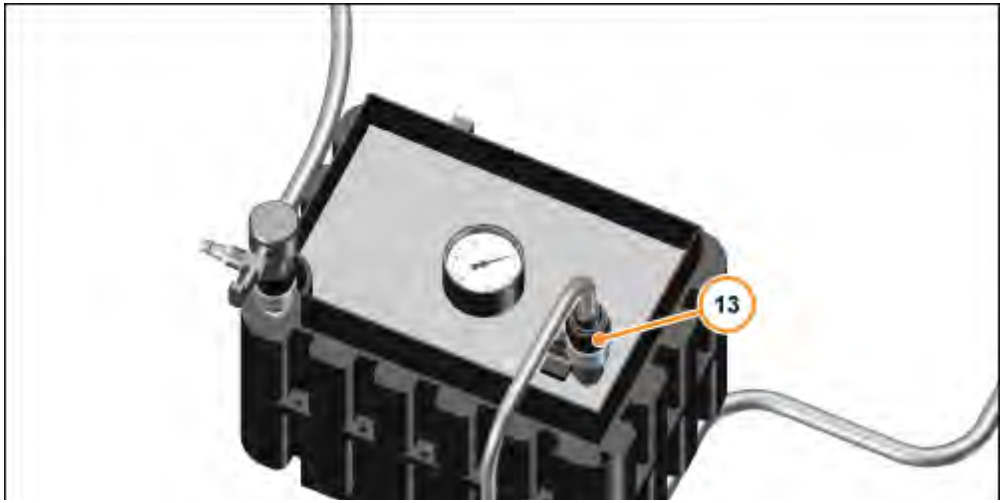

15 Close Venturi valve (10) and fill valve (13)
. once vacuum box is half full.
16 Remove filler tube (15).
.
17 Open lower valve (12).
.

Care Point: Ensure vacuum box fill level does not exceed sight level.

Care Point: During this stage of the procedure do not exceed 0.8 bar vacuum.

18 Gradually open Venturi valve (10) to draw air
. out of vehicle coolant system. Continue until no bubbles can be seen in the hose connecting the vacuum box to the coolant reservoir, or the box becomes full.
19 Close Venturi valve (10) and allow coolant to
. be drawn into the vehicle.
20 Repeat steps 10 – 18.
.
21 Detach equipment from vehicle.
.
22 Drain all coolant from vacuum box.
.
23 Repeat steps 2 - 10.
.

Care Point: Ensure vacuum box fill level does not exceed sight level.

Care Point: During this stage of the procedure do not exceed 0.8 bar vacuum.

24 Repeat steps 16 – 18 using a completely
· empty vacuum box.
25 Remove equipment.
.
26 Once vehicle has been filled, carry out a short

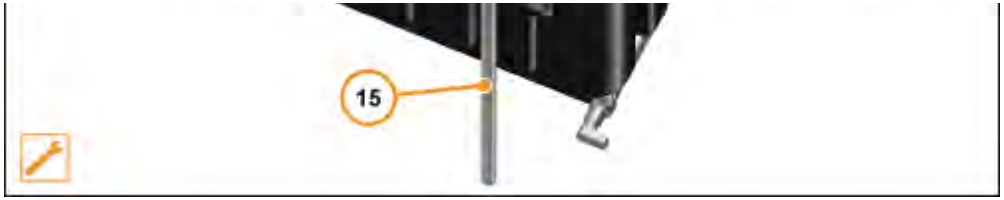

. vehicle run up and repeat steps 2 - 24.

Care Point: Ensure coolant reservoir is filled to the minimum level. Once the reservoir is at the correct level, add an additional 350ml of coolant mix.

27 Install components in reverse order.

.

Instructions

FG04 Powertrain / G01 Transmission / Transmission / AA-RM-04G01-01-015 - Drain/fill fluid - Clutch

Preparation work

1. AA-RM-02A04-04-007 Secure/lift vehicle on lifting platform

2. AA-RM-03B03-01-001 Remove/install wheels

3. AA-RM-02A02-03-001 Remove/install wheel arch liner - Rear

4. AA-RM-02A04-04-008 Remove/install transmission floor panel

Drain fluid - Clutch

Care Point: Ensure the clutches are opened, no gears engaged, no torque and operate airbrake a minimum of 2 times.

1. Run engine for 2 minute at 2000 rpm.

Care Point: Ensure airbrake is in a retracted position.

2. Stop engine.

Care Point: Ensure area around fill plug is cleaned with solvent before removing fill plug (3).

3. Remove fill plug (3).

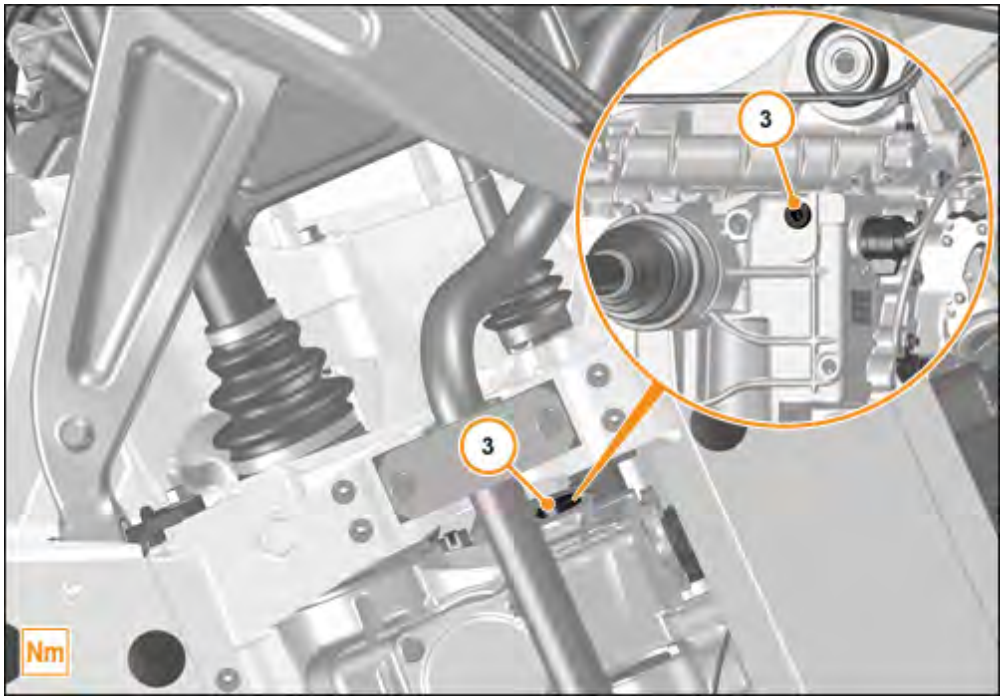

Care Point: Use a suitable container to catch the excess fluid.

4. Remove both drain plugs (1, 2).

Care Point: Allow approximately 5 minutes for oil to drain.

5. Let the oil drain completely.

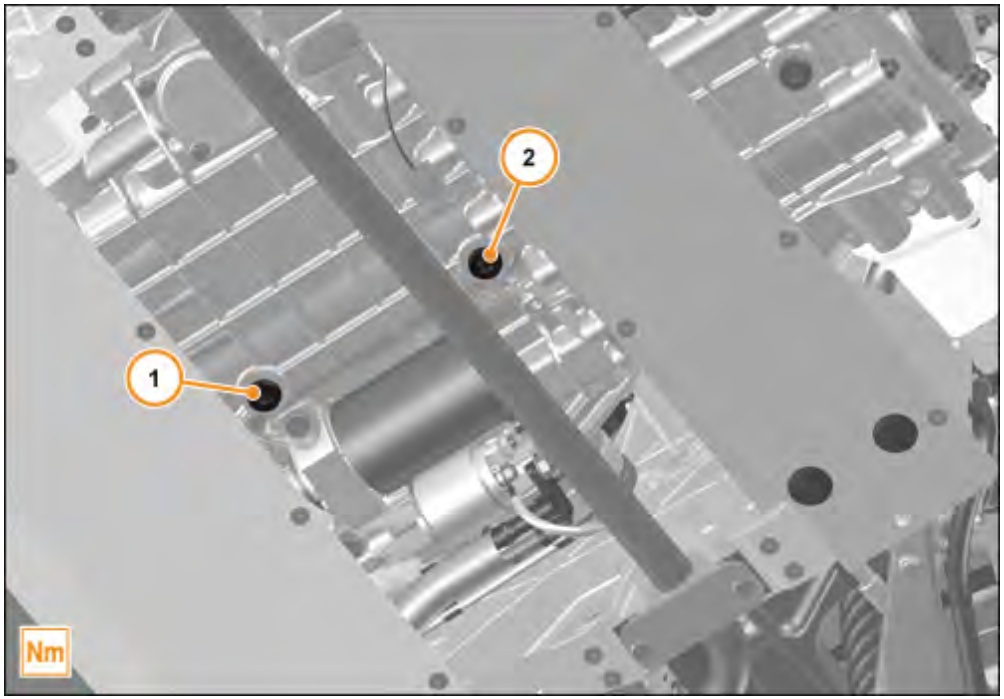

Fill fluid - Clutch

Care Point: Renew washer on drain plug.

1 Install drain plug (2). 50 Nm
.

Care Point: The following process must be followed quickly, so the clutch fluid will not drain back into clutch sump.

Care Point: Ensure a **very clean** funnel and pipe are used.
Fill using **new** clutch oil only.

2 Fill clutch fluid to fill plug (3) level. Pentosin FFL-4
.

3 Install drain plug (1), torque to 10 Nm to avoid stress damage on threads.

3 Install drain plug (1), torque to 50 Nm to avoid stress damage on threads.
.

4 Install fill plug (3), torque to 10 Nm to avoid stress damage on threads.
.

Care Point: Ensure the clutches are opened, no gears engaged, no torque.
Operate the airbrake a minimum of 2 times.

5 Run the engine for 2 minute at a fast idle speed of 2000 rpm.
.

Care Point: Ensure the airbrake is retracted.

6 Stop engine.
.

7 Remove fill plug (3).
.

Care Point: Use a suitable container to catch the excess fluid.

8 Remove drain plug (1).
.

Care Point: Approximately 1.0 litre of clutch fluid will be lost.
Flow of clutch oil will not stop completely.

9 Allow clutch oil to drain for 60 seconds.
.

Care Point: Drain plug (1) should remain removed.

10 Immediately top-up the clutch fluid within one minute until clutch fluid starts to drain out of fill point.
.

Care Point: Renew washer on drain plug.

11 Install drain plug (1). 50 Nm
.

12 Install fill plug (3), torque to 10 Nm to avoid stress damage on threads.
.

.

Care Point: Ensure the clutches are opened, no gears engaged.
Operate the airbrake a minimum of 2 times.

13 Run the engine for 2 minutes at fast idle speed of 2000 rpm.
.
14 Stop engine.
.
15 Top-up clutch fluid with 1.0 litres. Pentosin FFL-4
.

Care Point: Renew washer on fill plug (3).

16 Install the fill plug (3), torque fully. 50 Nm
.
17 Install components in reverse order.
.

Torque settings

FG04 Powertrain / G01 Transmission / Transmission / AA-RM-04G01-01-015 - Drain/fill fluid - Clutch

Description	Dimension	Value
Clutch fill and drain plug		50 Nm
Plug - Clutch oil drain/fill - Fill torque		10 Nm
Plug - Clutch oil drain/fill - Fill torque		10 Nm
Clutch fill and drain plug		50 Nm
Plug - Clutch oil drain/fill - Fill torque		10 Nm
Clutch fill and drain plug		50 Nm

Instructions

FG04 Powertrain / G01 Transmission / Transmission / AA-RM-04G01-01-017 - Remove/install filter - Clutch fluid

Preparation work

1. AA-RM-02A04-04-007 Secure/lift vehicle on lifting platform

2. AA-RM-02A04-04-008 Remove/install transmission floor panel

3. AA-RM-04G01-01-015 Clutch oil drain and refill

Remove filter - Clutch fluid

1. Remove bolts (1). M6 x 16 10 Nm

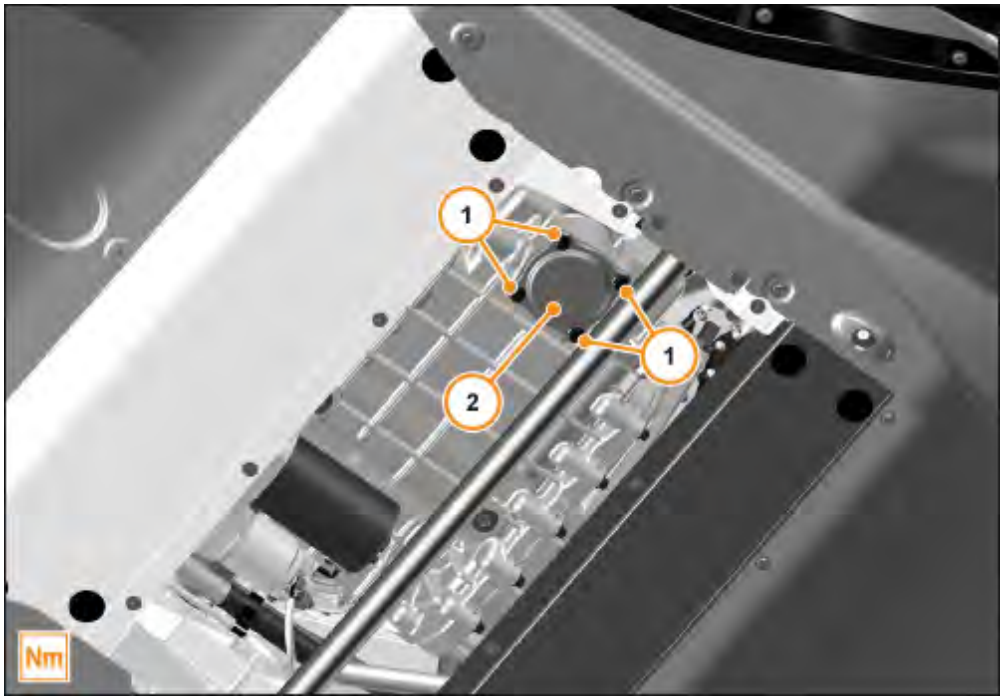

2. Remove filter - Clutch fluid (3).

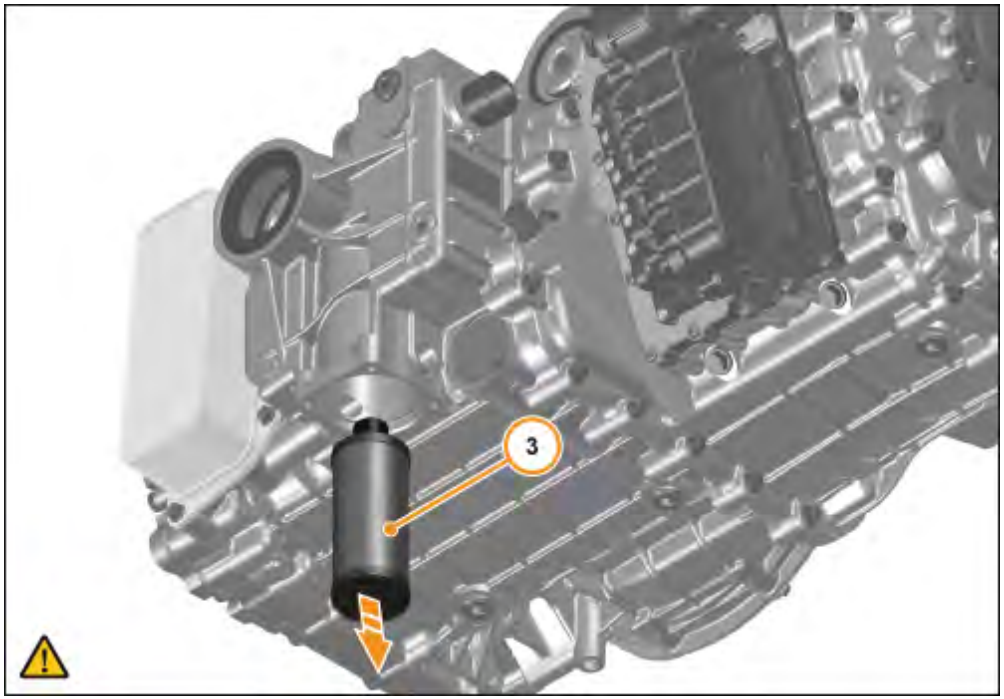

Install filter - Clutch fluid

Care Point: Ensure filter clutch fluid is clean and free from dirt and debris to avoid contamination.

1. Install components in reverse order.
2. Check transmission for leaks.

Torque settings

FG04 Powertrain / G01 Transmission / Transmission / AA-RM-04G01-01-017 - Remove/install filter - Clutch fluid

Description	Dimension	Value
Bolt Fluid cooler clutch - Transmission	M6 x 16	10 Nm

Instructions

FG02 Body Systems / A04 Panels Glazing Paint / Floors Diffuser / AA-RM-02A04-04-004 - Remove/install floor panel - rear diffuser

Preparation work

1. AA-RM-02A04-04-007 Secure/lift vehicle on lifting platform.

Remove floor panel - rear diffuser

Care Point: Two technicians required.

1. Remove caps (1).

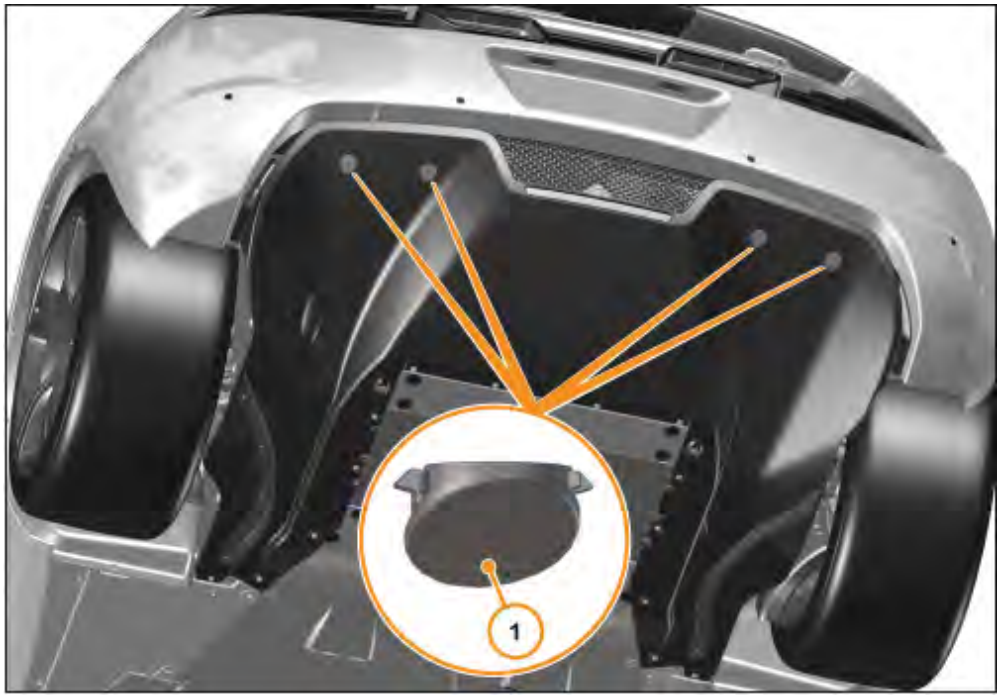

2. Remove bolts (2). M6 x 16 6 Nm

3. Remove torx bolts (3). M6 x 16 6 Nm

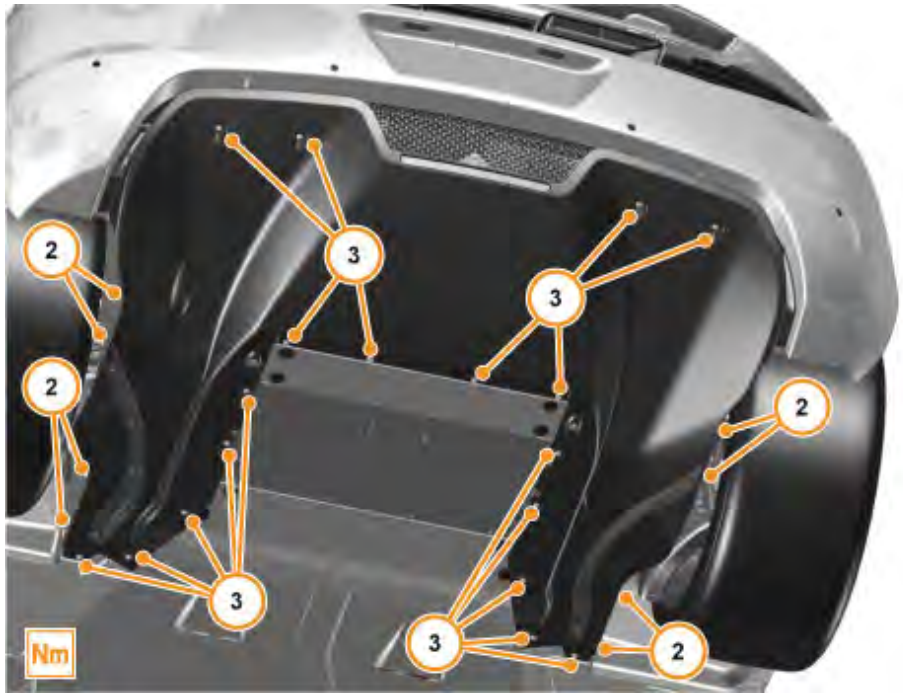

5. Disconnect fog/reverse lamp electrical connector (5).
6. Remove diffuser (6).

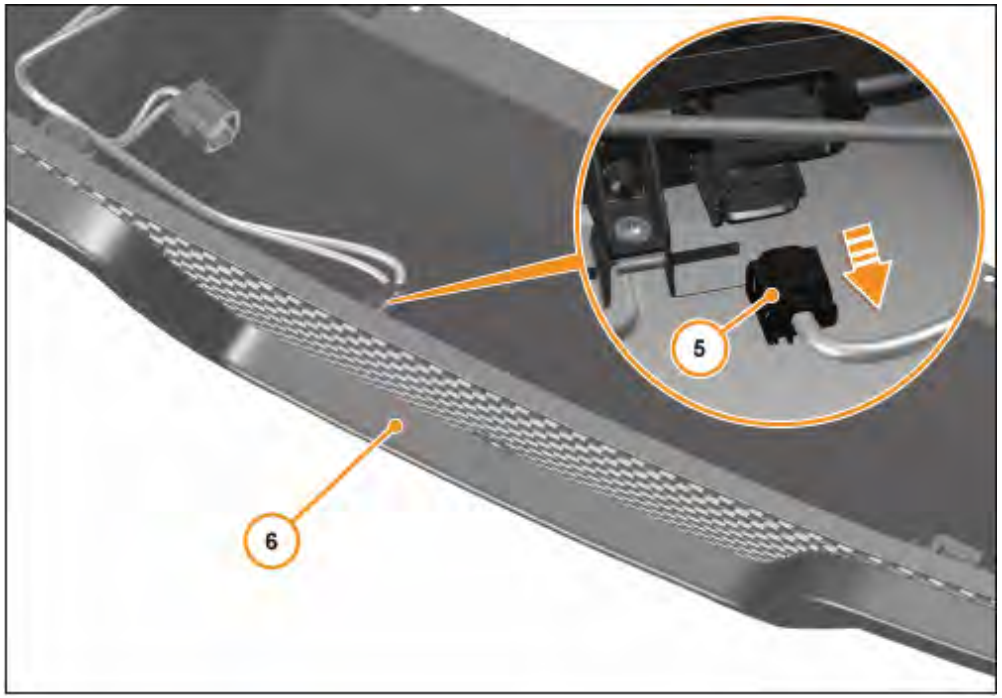

Install floor panel - rear diffuser

1. Install components in reverse order.
2. Check functionality of light and camera.

Torque settings

FG02 Body Systems / A04 Panels Glazing Paint / Floors Diffuser / AA-RM-02A04-04-004 - Remove/install floor panel - rear diffuser

Description	Dimension	Value
Bolt Diffuser - Wheel Arch Liner	M6 x 16	6 Nm
Bolt (Torx) Diffuser - Frame	M6 x 16	6 Nm

Instructions

FG04 Powertrain / G01 Transmission / Transmission / AA-RM-04G01-01-014 - Drain/fill fluid - Transmission oil

Preparation work

1. AA-RM-02A04-04-007 Secure/lift vehicle on lifting platform

2. AA-RM-02A04-04-004 Remove/install floor panel - rear diffuser

Care Point: Use a suitable container to catch the excess fluid.

Drain fluid - Transmission oil

1. Remove drain plug (1).

   Care Point: Allow approximately 2 minutes for oil to drain.

2. Let the oil drain completely.

Fill fluid - Transmission oil

Care Point: Renew drain plug copper washer.

1 Close drain plug (1). 50 Nm
.

2 Remove the plug (2).
.

Care Point: Use a clean funnel and pipe.

3 Fill up to level plug (2) (approximately 3
. litres). Mobil PTX 75W-90
4 Install the plug (2).
.

Care Point: Ensure the clutches are opened, no gears engaged, no torque.

5 Run the engine for 2 minute at idle speed.
.
6 Remove the plug (2).
.

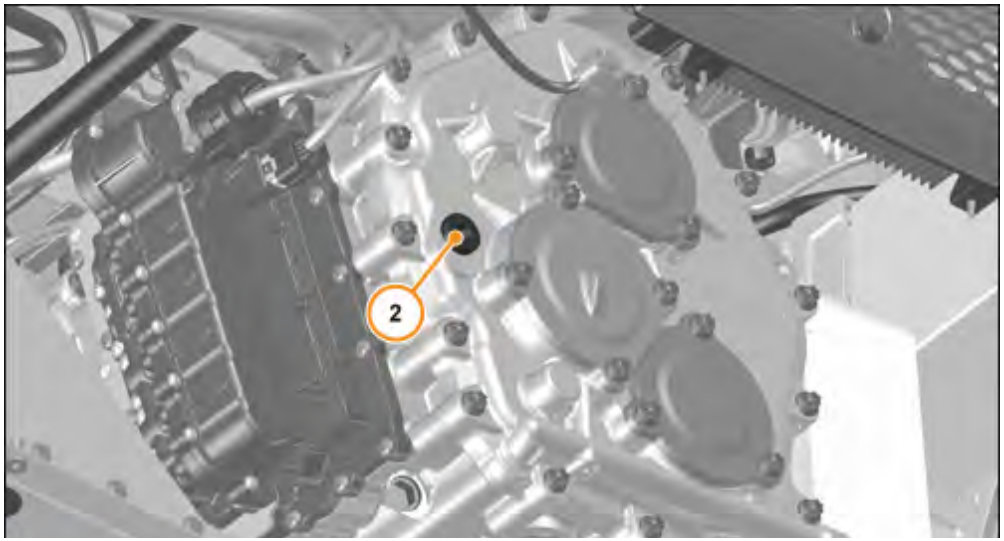

Care Point: Level needs to be topped up within a minute of the stopping engine and removing plug (2).

7 Top up transmission oil until it reaches the level plug (2).

8 Install the plug (2).

Care Point: Check the temperature with MDS.

9 Run the engine until transmission oil temperture reaches a minimum of 95°C.

10 Remove the plug (2).

Care Point: Level needs to be topped up within a minute of reaching 95°C and removing the plug (2).

11 Top up transmission oil until it reaches the level plug (2).

12 Renew fill plug copper washer..

13 Install the plug (2). 50 Nm

Torque settings

FG04 Powertrain / G01 Transmission / Transmission / AA-RM-04G01-01-014 - Drain/fill fluid - Transmission oil

Description	Dimension	Value
Transmission fill and drain plug		50 Nm
Transmission fill and drain plug		50 Nm

Instructions

FG04 Powertrain / G01 Transmission / Transmission / AA-RM-04G01-01-016 - Remove/install filter - Transmission fluid

Preparation work

1. AA-RM-02A04-04-007 Secure/lift vehicle on lifting platform
2. AA-RM-02A04-04-008 Remove/install transmission floor panel
3. AA-RM-04G01-01-014 Transmission oil drain and refill

Remove filter - Transmission fluid

1. Remove bolt (1). M6 x 16 10 Nm
2. Remove filter - Transmission fluid (2).

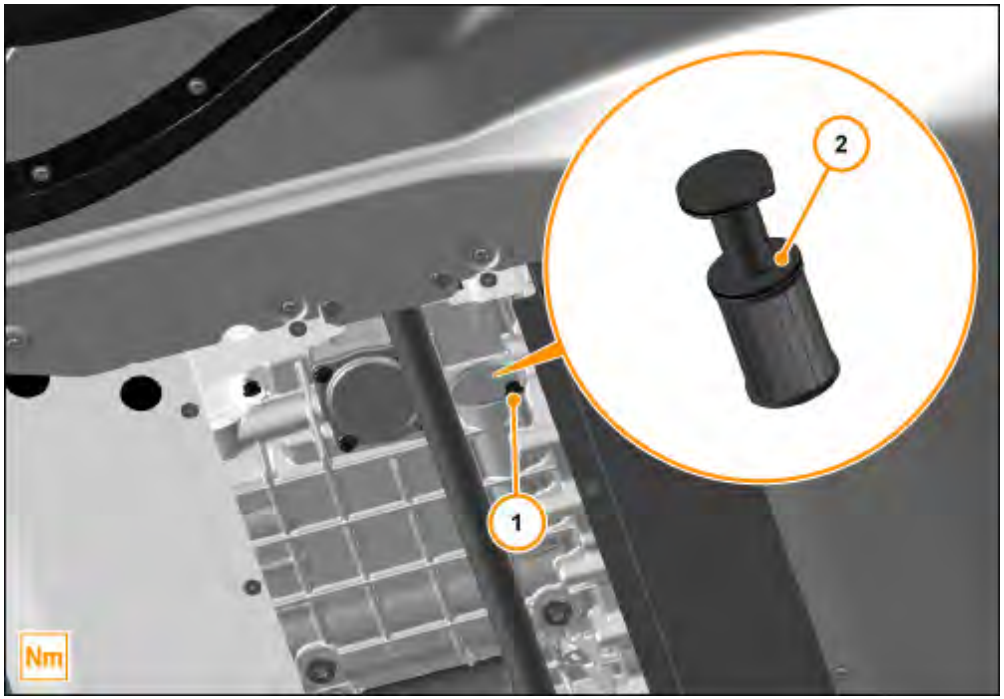

Install filter - Transmission fluid

Care Point: Ensure filter transmission fluid is clean and free from dirt and debris to avoid contamination.

1. Install components in reverse order.
2. Check transmission for leaks.

Torque settings

FG04 Powertrain / G01 Transmission / Transmission / AA-RM-04G01-01-016 - Remove/install filter - Transmission fluid

Description	Dimension	Value
Bolt Filter transmission fluid - Transmission	M6 x 16	10 Nm

Instructions

FG03 Chassis / K01 Fuel System / Fuel Tank / AA-RM-03K01-01-001 - Remove/install fuel filter

Preparation work

1. AA-RM-02A04-04-007 Secure/lift vehicle on lifting platform
2. AA-RM-02A02-03-004 Remove/install luggage bin - Rear
3. AA-RM-05M01-01-001 Disconnect/connect battery ground line
4. AA-RM-03B03-01-001 Remove/install wheels
5. AA-RM-02A02-03-001 Remove/install wheel arch liner - Rear
6. AA-RM-02A04-04-001 Remove/install floor panel - Engine/fuel tank
7. AA-RM-02A04-04-005 Panel - Rear lower extension
8. AA-RM-03L01-01-005 Drain/fill cooling system
9. AA-RM-02A05-01-009 Draining and filling air conditioning
10. AA-RM-02A04-03-007 Remove/install bodyside lower
11. **Care Point:** Up to MY14
    AA-RM-02A04-03-010 Remove/install panel - Side lower
12. **Care Point:** From MY15
    AA-RM-02A04-03-010 Remove/install panel - Side lower - MY15
13. **Care Point:** Up to MY14
    AA-RM-02A02-02-005 Remove/install radiator grille
14. **Care Point:** From MY15
    AA-RM-02A02-02-005 Remove/install radiator grille - MY15
15. **Care Point:** Up to MY14
    AA-RM-02A05-01-003 Remove/install condenser

16. **Care Point:** From MY15
    AA-RM-02A05-01-003 Remove/install condenser - MY15
17. **Care Point:** Up to MY14
    AA-RM-03L01-01-007 Remove/install radiator - water - rear
18. **Care Point:** From MY15
    AA-RM-03L01-01-007 Remove/install radiator - water - rear - MY15
19. AA-RM-03K01-01-003 Drain/fill fuel tank
20. AA-RM-03K01-01-004 Remove/install fuel tank

WARNING!

Risk of explosion, poisoning and injury working with fuel!
Fuels are highly inflammable and toxic if inhaled. Fuel vapours are explosive, invisible and spread out at floor level. This vapour is poisonous when inhaled and has an anesthetizing effect in high concentrations. Fuel can cause damage to skin. For example, skin is degreased when it comes into contact with gasoline fuel.
Observe the national safety precautions and regulations.

- Keep fuel away from fire, open light or ignition sources.
- Ensure the work place is adequately ventilated.
- Never drain or pour in fuels over assembly pits.
- Store drained fuel in a suitable and sealed vessel.
- Immediately eliminate any fuel which has flowed out.
- Conducting work on a vehicle with open flames (e. g. welding etc.).
- Before carrying out this work, remove relevant parts of fuel system and seal open fuel lines with plugs.

Remove fuel filter

1 Remove nuts (1). M6 8 Nm
.
2 Detach harness carrier (2).
.

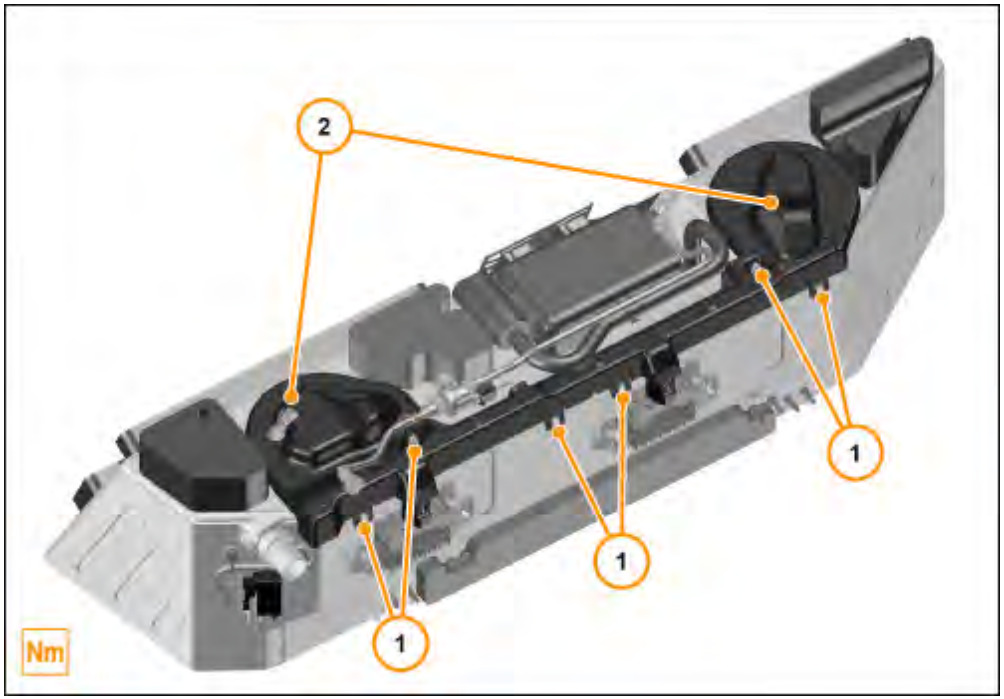

3 Disconnect electrical connectors (3).
.
4 Remove harness carrier with harness.
.

5 Remove fuel feed line tank to engine bay (4).
.

6 Detach purge line (5).
.

Care Point: Filter is on left hand access cover.

7 Remove bolts (6). M6 x 16 8 Nm
.

8 Remove retaining ring (7).
.

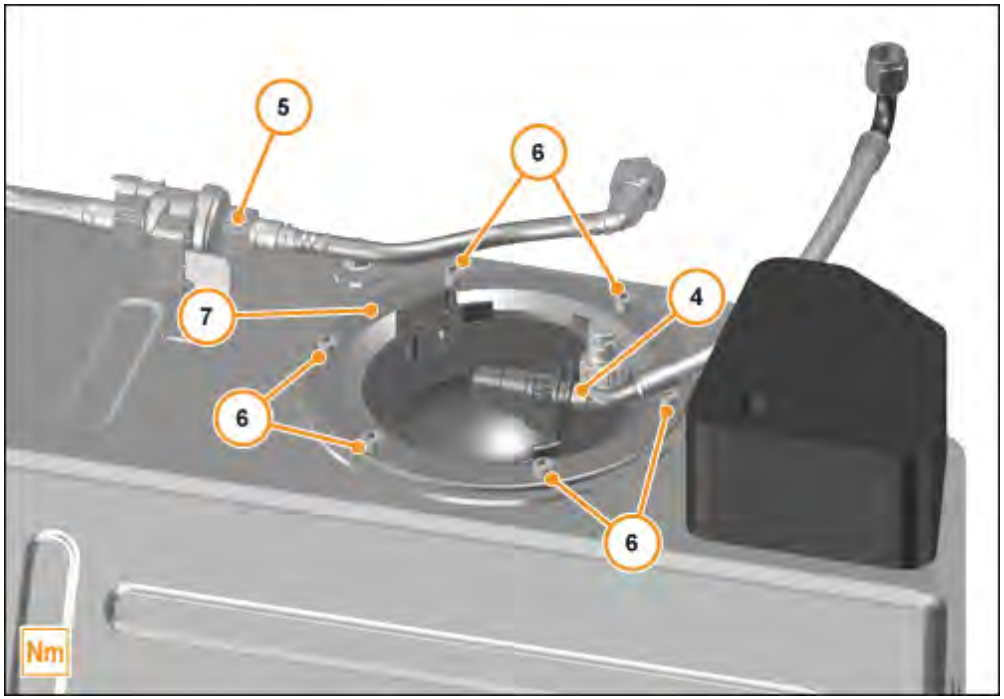

9 Remove access cover with fuel filter (8) partially.

10 Disconnect electrical connectors (9).

11 Detach fuel line (10).

12 Remove access cover with fuel filter (8) completely.

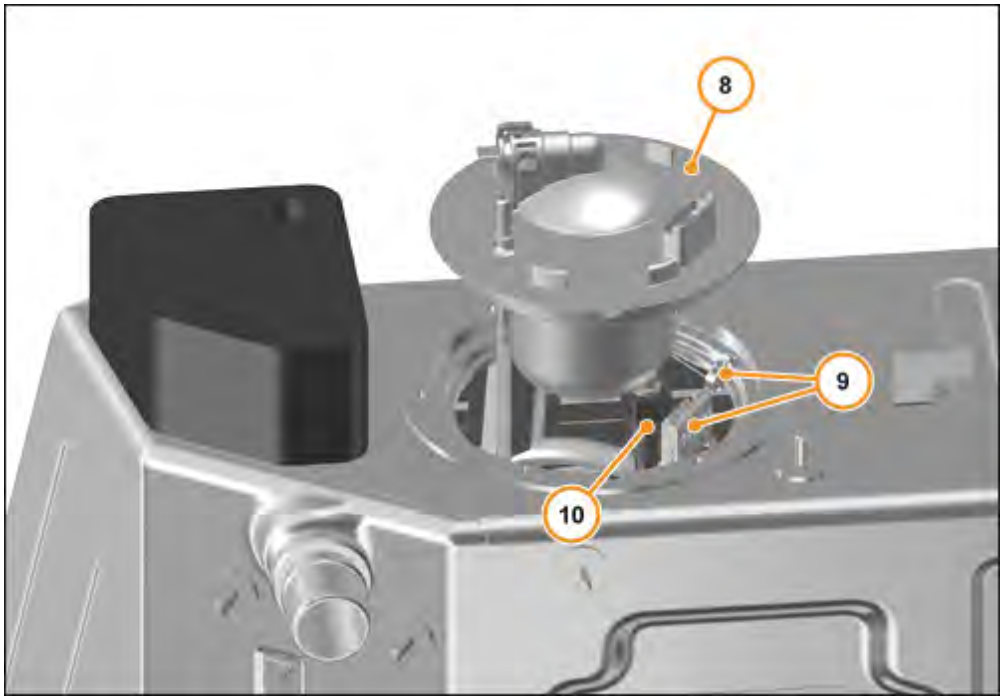

Install fuel filter

1. Renew access cover with fuel filter.
2. Renew sealing ring.
3. Install components in reverse order.

Torque settings

FG03 Chassis / K01 Fuel System / Fuel Tank / AA-RM-03K01-01-001 - Remove/install fuel filter

Description	Dimension	Value
Nut harness carrier - Fuel tank	M6	8 Nm
Bolts with washers Access cover retaining ring	M6 x 16	8 Nm

Instructions

Care Point: Risk of paint damage.

Remove cover door shut - Rear lower

1. Open door.
2. Use tape to prevent paint damage.
3. Remove (arrows) cover door shut (1) using suitable trim tool.

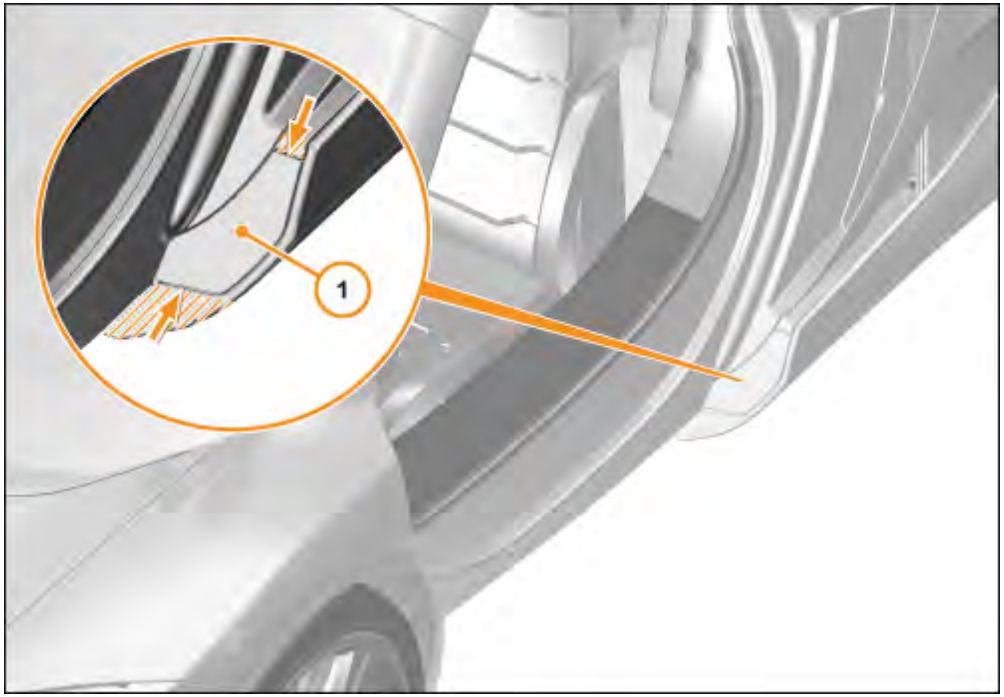

Install cover door shut - Rear lower

1. Install components in reverse order.

Instructions

Preparation work

1. AA-RM-02A04-04-007 Secure/lift vehicle on lifting platform
2. AA-RM-03B03-01-001 Remove/install wheels
3. AA-RM-02A02-03-001 Remove/install wheel arch liner - Rear
4. AA-RM-02A03-03-003 Remove/install cover door shut - rear lower

Care Point: Risk of paint damage.

Remove bodyside lower - Rear

1. Open door.

2. Use tape to prevent paint damage (arrows).

3. Prise out cover door shut (1).

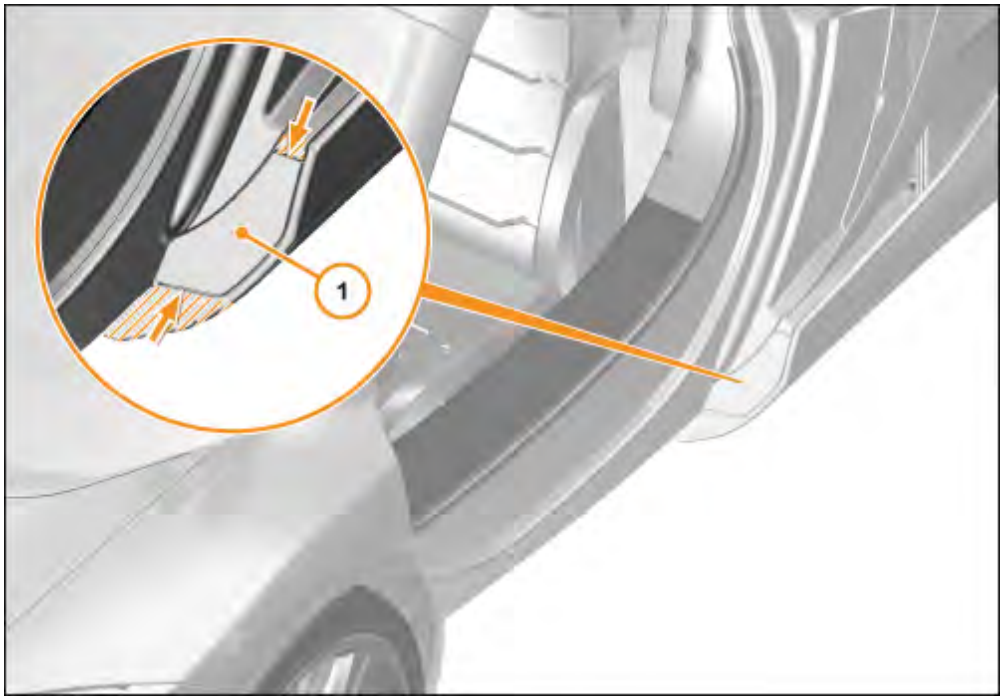

4. Remove bolts (2). M6 x 20 8 Nm

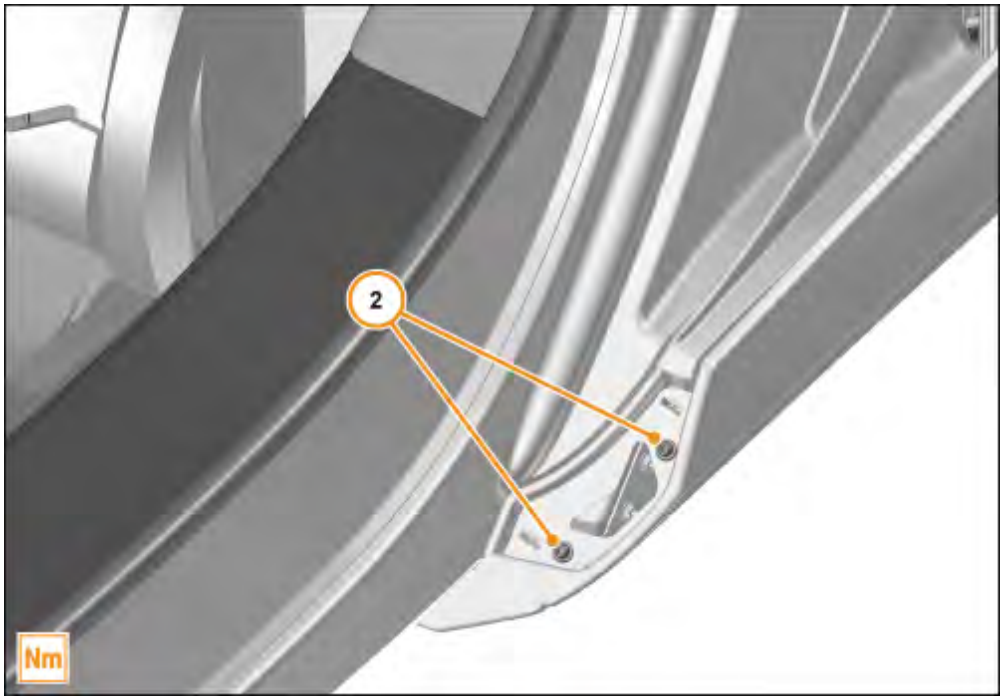

5. Remove bolts (3). M6 x 16 8 Nm

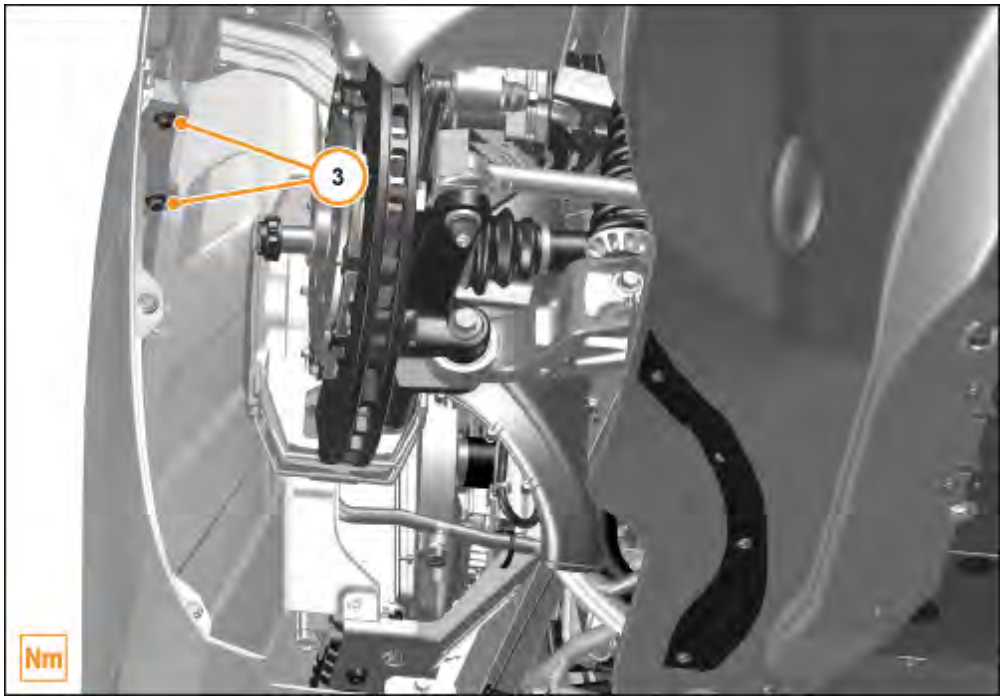

6. Remove bolts (4). M6 x 16 8 Nm

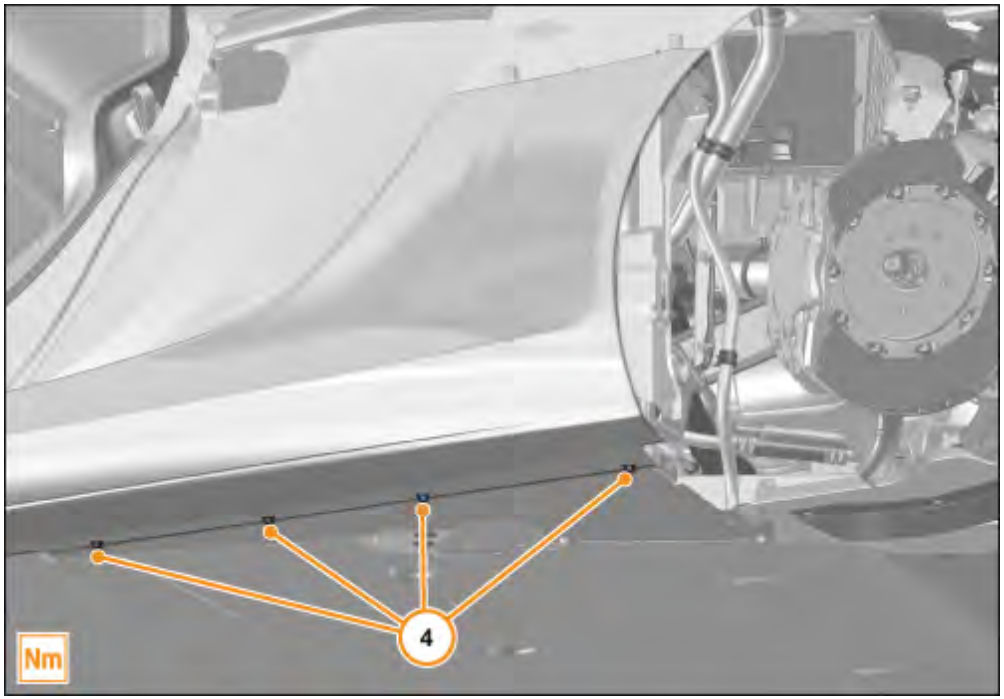

7. Remove bodyside lower rear (arrows).

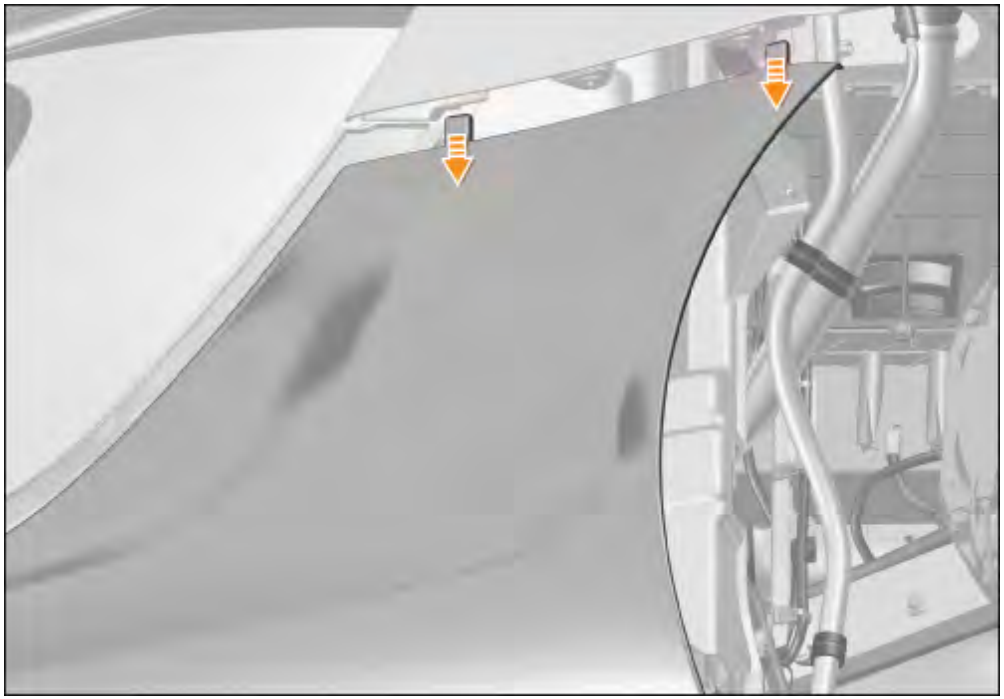

Install bodyside lower - Rear

1. Install components in reverse order.

Instructions

FG02 Body Systems / A04 Panels Glazing Paint / Roof Panels Fenders Fuel Filler / AA-RM-02A04-03-010 - Remove/install panel - Side lower - Up to MY14

Preparation work

1. AA-RM-02A03-03-003 Remove/install cover door shut - rear lower

2. AA-RM-02A04-03-007 Remove/Install panel – bodyside rear lower.

Remove panel - Side lower - Up to MY14

Care Point: Risk of paint damage.

1. Detach (arrow) cover (1).

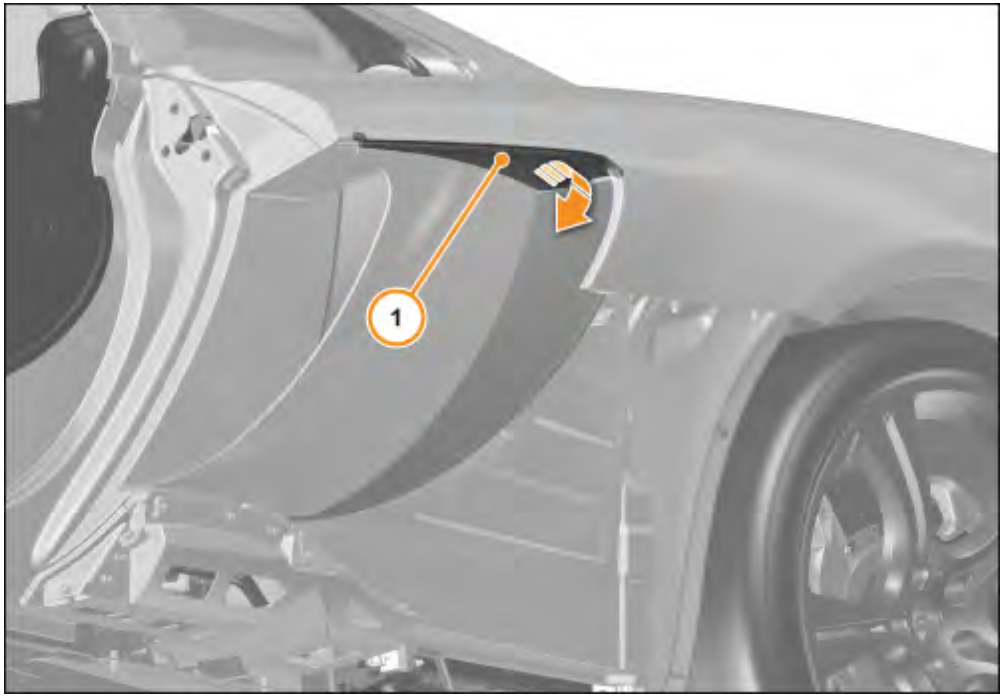

2. Remove bolts (2). M10x20 5 Nm
3. Remove nuts (3). M6 6 Nm
4. Remove side lower panel (4).

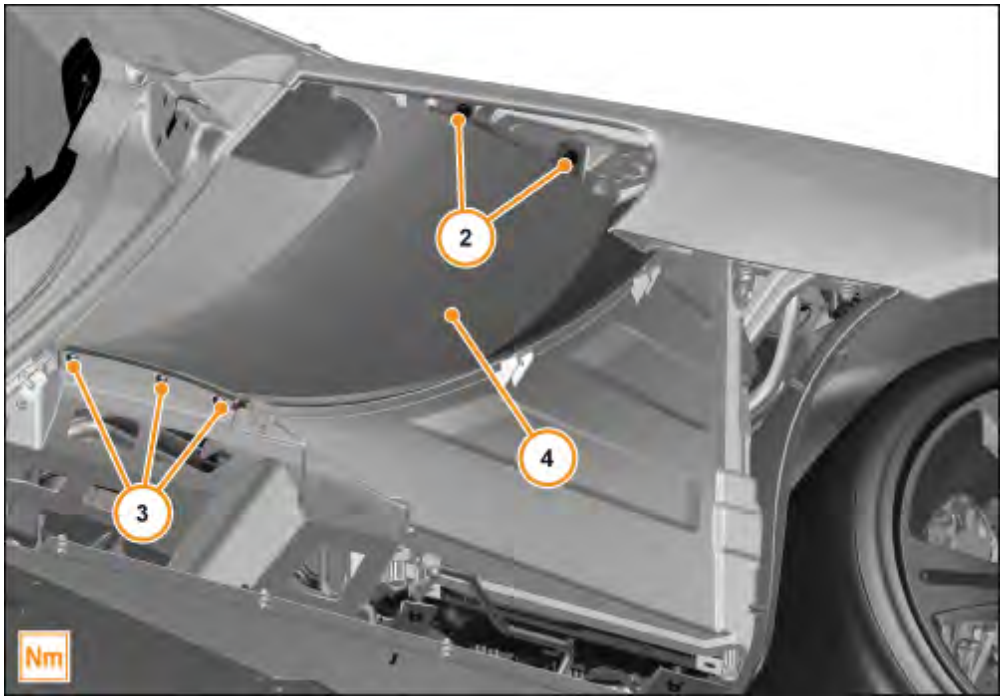

Install panel - Side lower - Up to MY14

1. Install components in reverse order.

Torque settings

FG02 Body Systems / A04 Panels Glazing Paint / Roof Panels Fenders Fuel Filler / AA-RM-02A04-03-010 - Remove/install panel - Side lower - Up to MY14

Description	Dimension	Value
Bolt Panel - Side lower top	M10x20	5 Nm
Nut Panel - Side lower lower	M6	6 Nm

Instructions

FG02 Body Systems / A02 Exterior Trim Lighting Wipers / Finishers Badges Grilles Decals / AA-RM-02A02-02-005 - Remove/install radiator grille - Up to MY14

Preparation work

1. AA-RM-02A04-04-007 Secure/lift vehicle on lifting platform.
2. AA-RM-03B03-01-001 Remove/Install wheels.
3. AA-RM-02A02-03-001 Remove/Install wheel arch liner – Rear.
4. AA-RM-02A03-03-003 Remove/install cover door shut - rear lower
5. AA-RM-02A04-03-007 Remove/Install panel – bodyside rear lower.
6. AA-RM-02A04-03-010 Remove/install panel - side lower

Remove radiator grille - Up to MY14

Care Point: Risk of paint damage.

1. Remove screw (1). M6 x 16 5 Nm
2. Remove button head screw (2). M6 x 16 5 Nm
3. Remove screw (3). 2 Nm
4. Remove radiator grille (4).

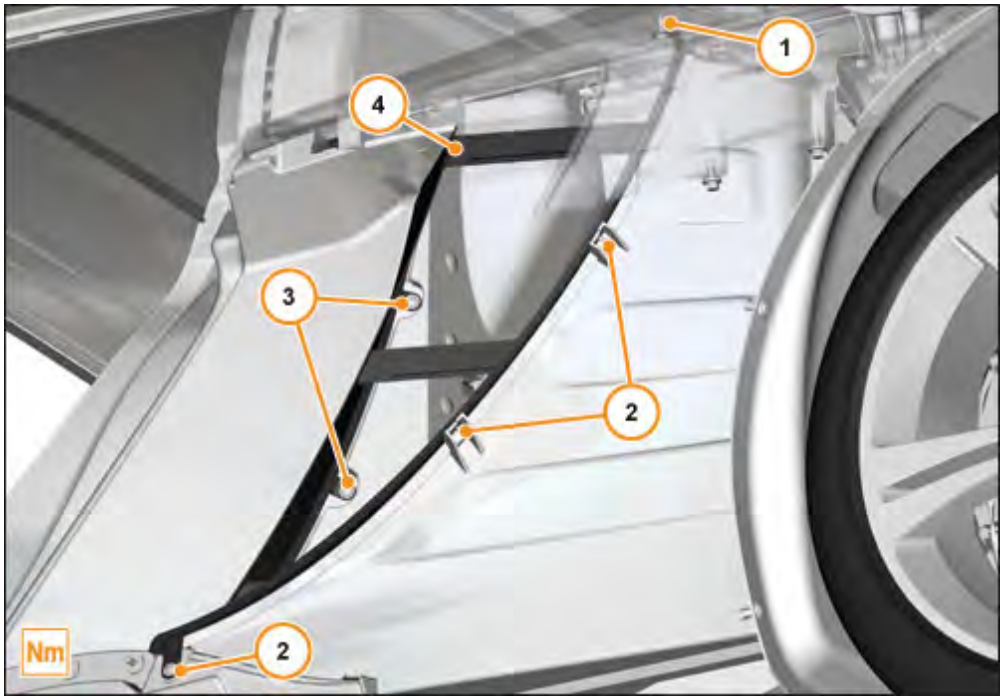

Install radiator grille - Up to MY14

1. Install components in reverse order.

Torque settings

FG02 Body Systems / A02 Exterior Trim Lighting Wipers / Finishers Badges Grilles Decals / AA-RM-02A02-02-005 - Remove/install radiator grille - Up to MY14

Description	Dimension	Value
Screw - Grille to Bodyside	M6 x 16	5 Nm
Button Head Screw - Grille to Rocker Panel	M6 x 16	5 Nm
Screw Grille - Radiator Duct		2 Nm

Instructions

FG04 Powertrain / F01 Power Unit / Power Unit / AA-RM-04F01-01-037 - Remove/Install engine intake sound generator

Remove engine intake sound generator

1. Remove inlet manifold cover.

2. Detach hose (1).

3. Remove clamp (2). M6 5 Nm

4. Remove engine intake sound generator.

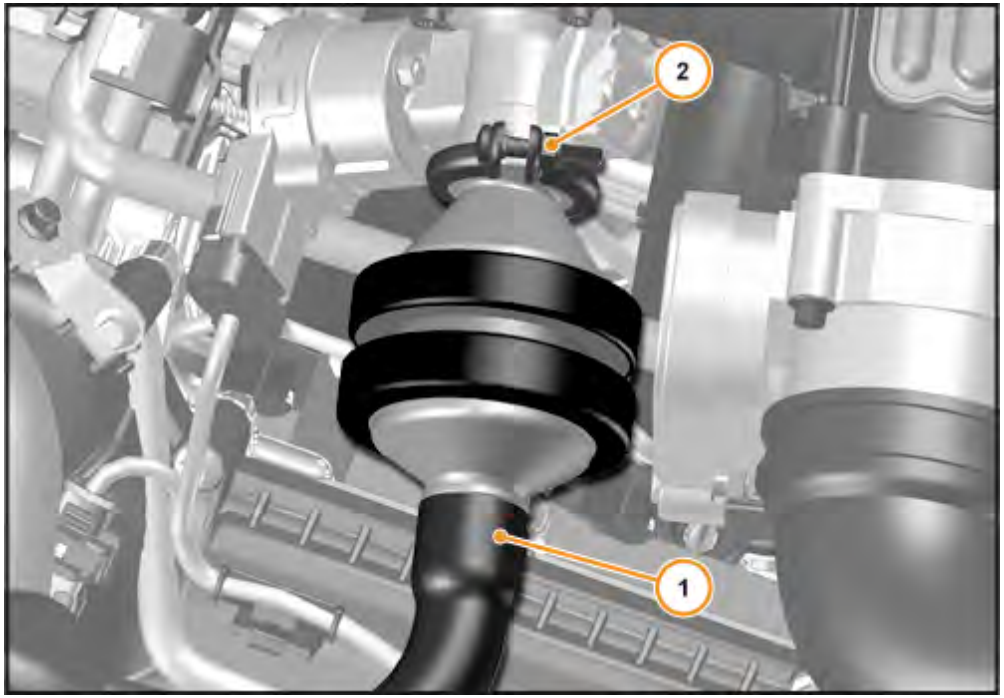

Install engine intake sound generator

1. Install components in reverse order

2. Check functionality

Torque settings

FG04 Powertrain / F01 Power Unit / Power Unit / AA-RM-04F01-01-037 - Remove/Install engine intake sound generator

Description	Dimension	Value
Clamp - ISG to Throttle	M6	5 Nm

Instructions

Remove cover

Care Point: Apply tape in the following areas (A) on point of bodyside rears, rear deck, and engine side covers in gas strut hinge area.

1 Apply tape (A).

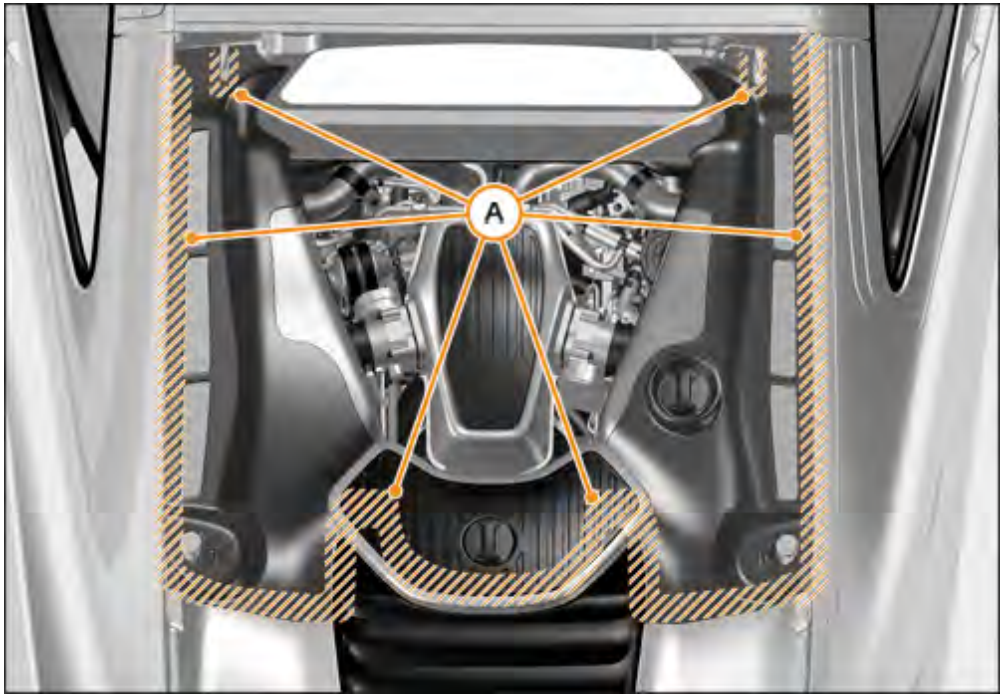

2 Remove cover (1).

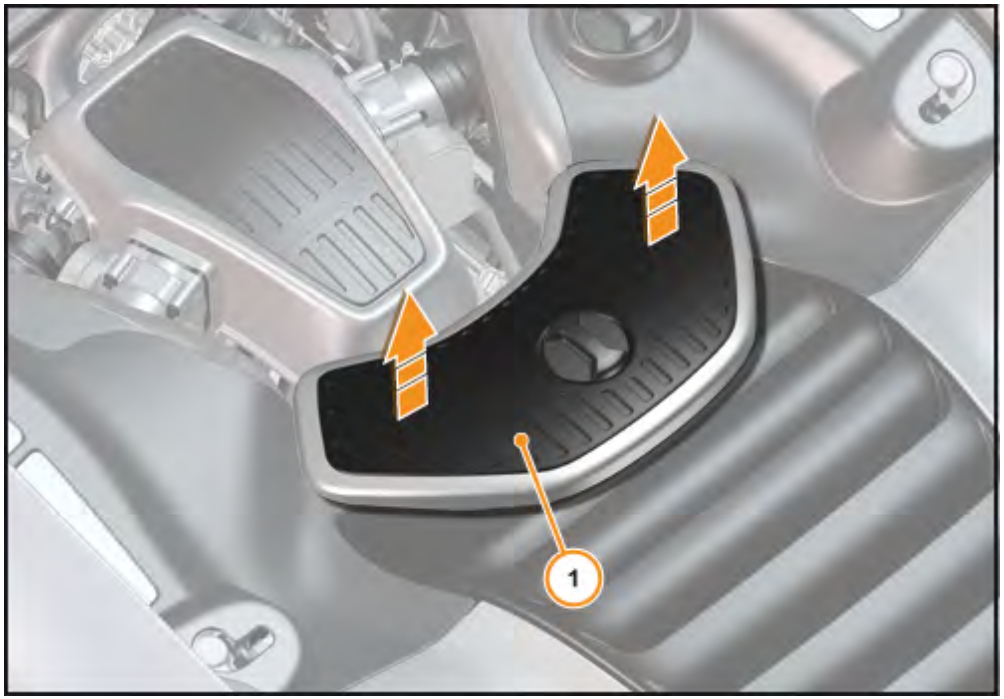

Care Point: Ensure header tank clamps do not drop into the engine bay.

3 Remove bolts with washers (2). M6 x 16 6 Nm

Care Point: Use 10mm flexi-head ratchet spanner.

Care Point: Clamp is fitted between bracket and nut. Ensure this does not fall into the engine bay.

Care Point: Ensure grommet remains in place on header tank bracket.

4 Remove nut (3). M6 6 Nm

Care Point: Ensure that the hoses connected to the coolant reservoir do not become detached, put under high tension, or become damaged during detachment and rotation. Protect the area sufficiently before carrying out this step.

5 Move coolant reservoir (4) into raised position and turn 90°.

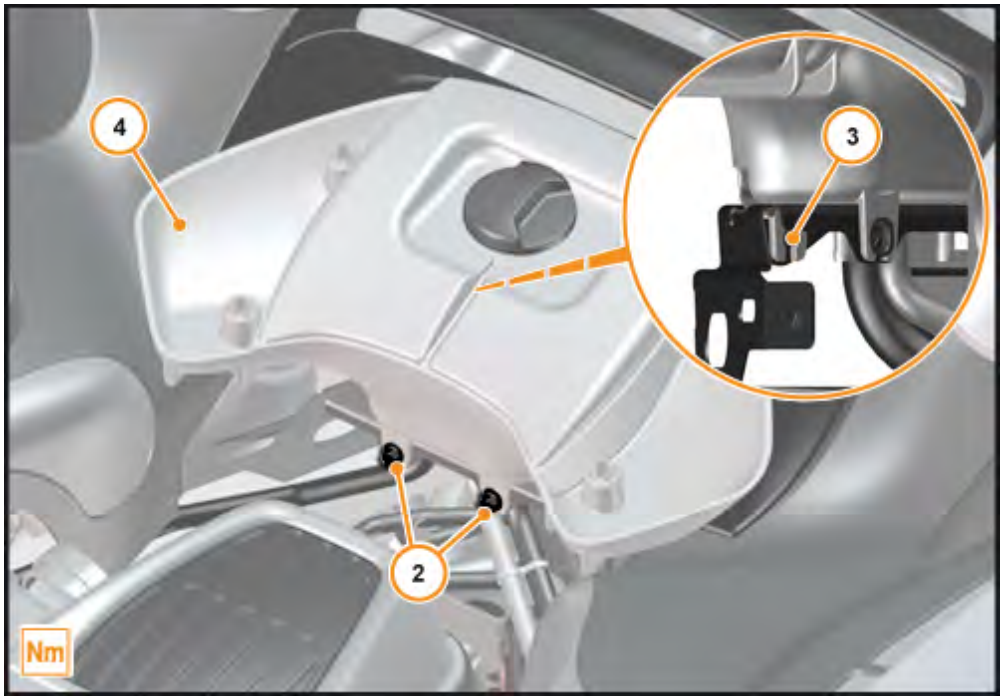

Care Point: Use second operater to hold engine cover.

Care Point: Remove gas strut and lower ball stud 10 Nm for side you want to remove.

6 Remove bolts (5). M6 x 16 4 Nm
.

7 Remove bolts (6). M6 x 12 5 Nm
.

Care Point: Risk of component damage.

8 Remove engine compartment side cover (7).
.

9 Refit lower ball stud 10 Nm and gas strut.
.

10 Repeat steps 6 - 8 for opposite side.
.

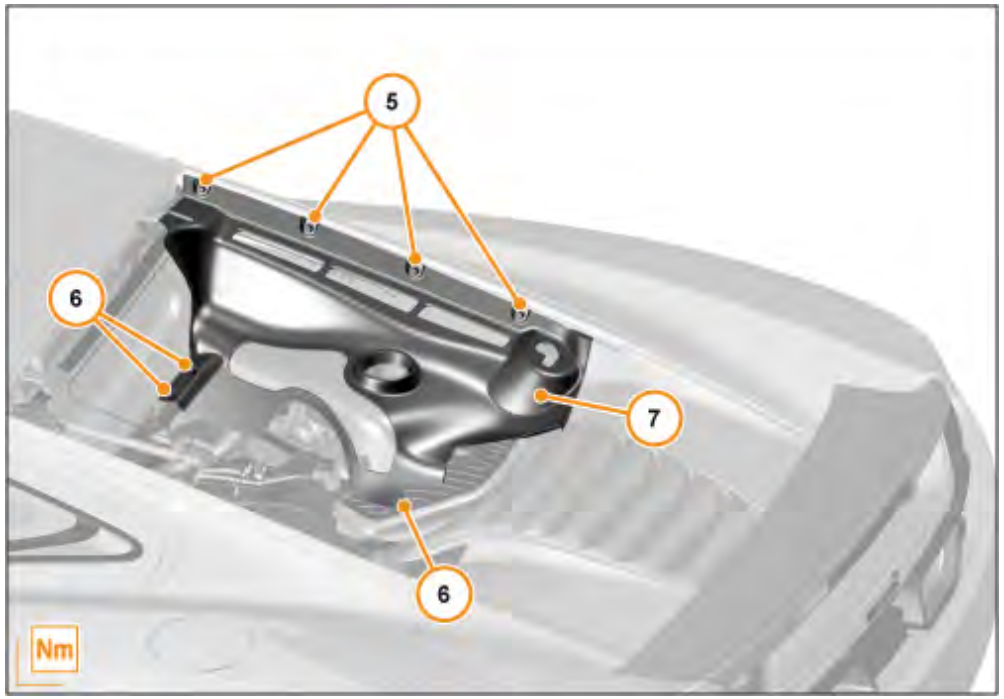

Install engine compartment side cover

Care Point: Risk of component damage.

1. Install components in reverse order

Torque settings

FG02 Body Systems / A03 Closures / Engine Cover / AA-RM-02A03-04-005 - Remove/install engine compartment side cover

Description	Dimension	Value
Bolt Reservoir coolant - Bracket	M6 x 16	6 Nm
Nut Reservoir coolant - Bracket	M6	6 Nm

Ball stud - Engine Cover		10 Nm
Bolt Engine compartment side cover - Body	M6 x 16	4 Nm
Bolt Engine compartment side cover - Body	M6 x 12	5 Nm
Ball stud - Engine Cover		10 Nm

Instructions

FG04 Powertrain / F01 Power Unit / Power Unit / AA-RM-04F01-01-026 - Remove/install spark plug

Preparation work

1. AA-RM-02A04-04-007 Secure/lift vehicle on lifting platform

2. AA-RM-02A03-04-005 Remove/install side cover engine compartment cover

DANGER!

Risk of death from high voltages in the ignition system!
Electronic ignition systems operate within a hazardous power range both at the low voltage side (primary circuit) as well as on the high voltage side (secondary circuit). Contacts with such parts can result in burns, heart flutter or cardiac arrest. Persons with heart pacemakers must not perform any work on the ignition system.
Wear safety shoes (with rubber soles).

- Switch ignition off before commencing any work on the ignition system.
- Do not touch or dismantle components of ignition system when working on running or rotating engine with cranking speed.
- Detach the crankshaft position sensor connection either at the control unit or at the position sensor.
- Do not install any electrically conducting, uninsulated adapters or installation sensors into the ignition cable.

WARNING!

Risk of burning and fire when handling hot or glowing objects!
Unprotected contact with hot or glowing objects can cause severe burns to the skin and eyes. If glowing objects come into contact with water, hot steam or hot splashing water this can result in severe skin and eye burns. Severe and possibly permanent injuries can result if hot or glowing objects come into contact with unprotected skin or eyes. Fire can result if glowing objects come into contact with flammable materials or substances.
Wear protective clothing, safety glasses and heat resistant gloves.

- Avoid sparks and keep objects away from flammable materials and substances when handling glowing objects.

Care Point: Allow hot parts to cool down first!

Remove spark plug

1. Detach crankcase ventilation hoses (1, A-B) from the oil tank.
2. Move crankcase breather (2) in direction (C).

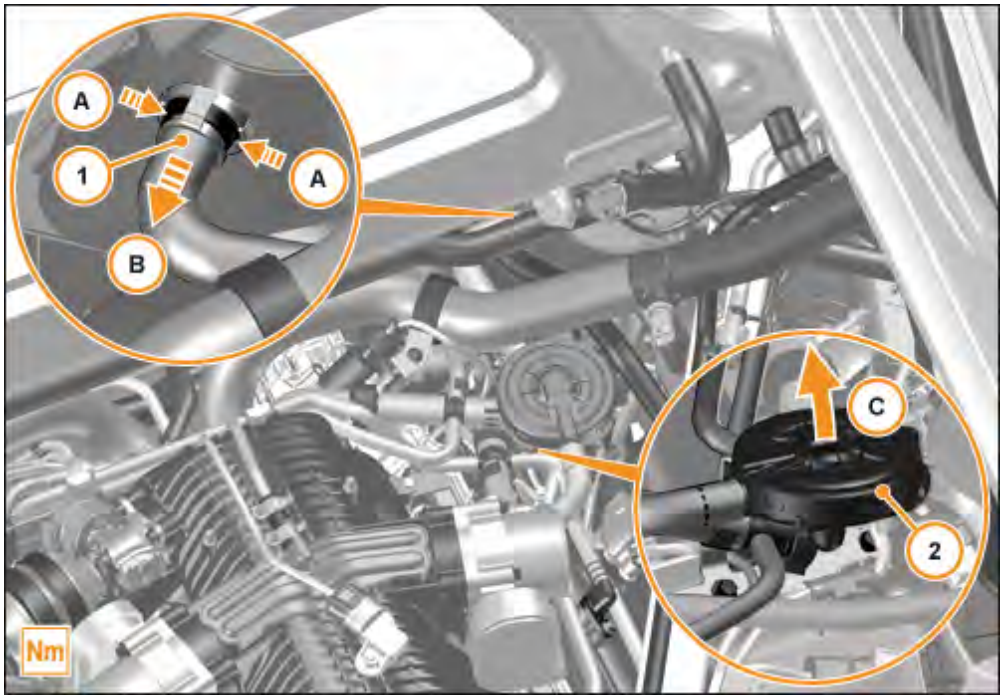

3. Note overview of cylinder sequence 1 - 8.

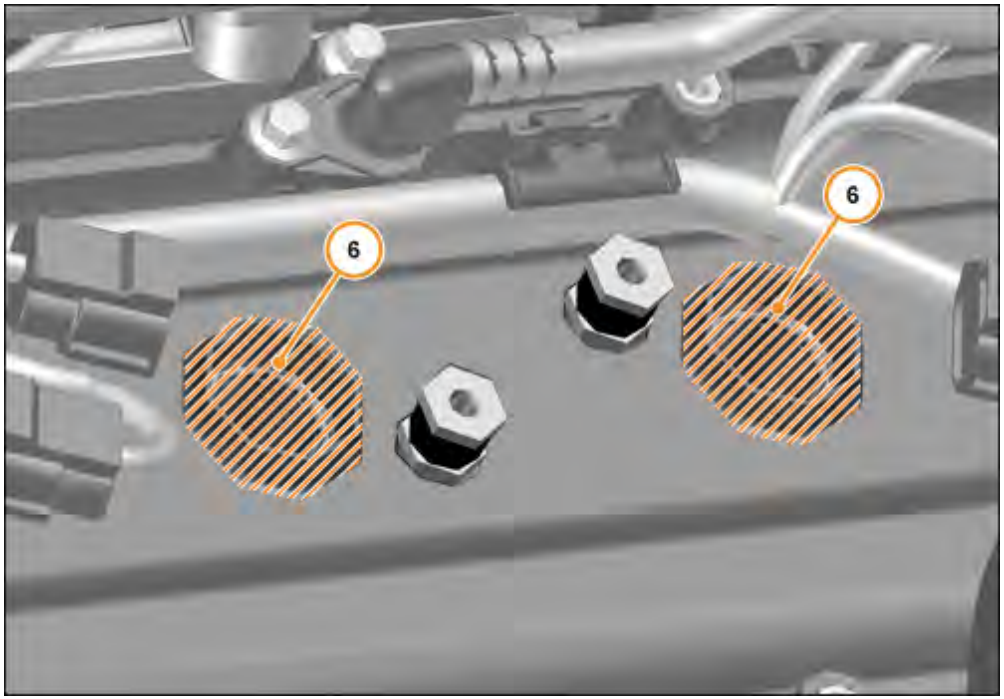

Care Point: Must remove bolts (4) for ignition coils 4 and 8 before disconnect happens.

Care Point: To remove ignition coils (7) 4 and 8, once bolt (4) is removed turn 180° to disconnect electrical connectors (3).

Care Point: Remove ignition coils (7) 4 and 8 first to allow better access to disconnect ignition coils (7) 3 and 7.

4. Disconnect electrical connectors (3).

Care Point: To remove bolt under frame for ignition coils (7) 3 and 7 access bolts from opposite side of vehicle with a magnetic socket.

5. Remove bolt (4). <u>M6 x 20 6 Nm</u>

Care Point: Prevent debris from falling in whilst selecting tools for spark plug removal.

6. Remove ignition coil (5).

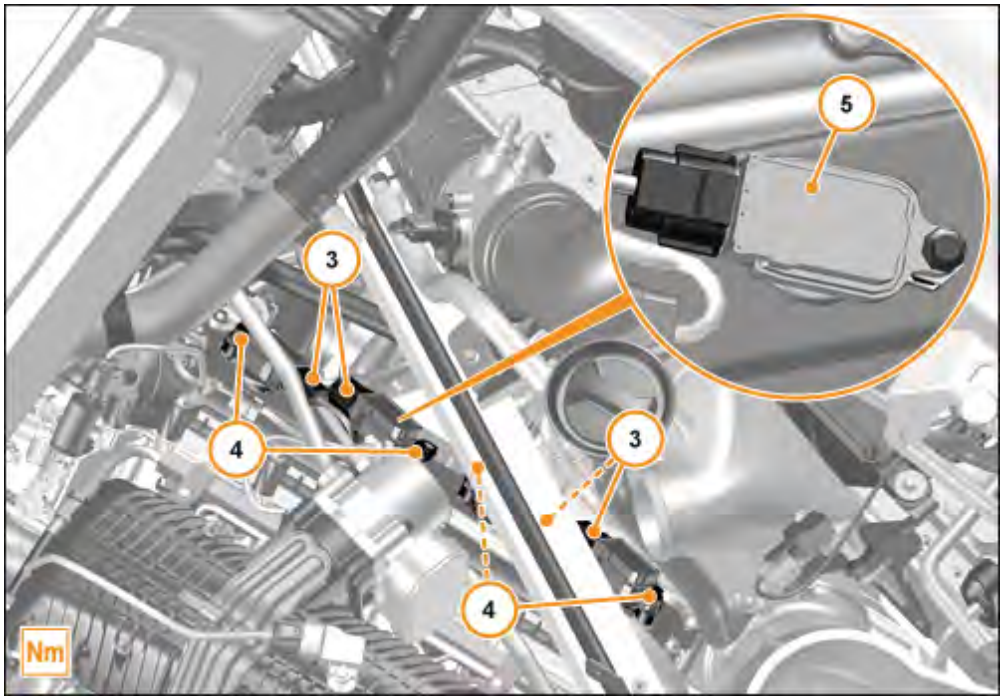

Care Point: **For spark plugs in position 1 and 5 the following tools are required:**
bent handle flexi head 3/8" drive ratchet with 6” locking extension
14mm spark plug socket that is either magnetic or has an interference fit
For all the remaining 6 spark plugs the following tools are required:
bent handle flexi head ratchet with 2” locking extension
universal joint
14mm spark plug socket that is either magnetic or has an interference fit

Care Point: Prevent debris from falling in whilst selecting tools for spark plug (7) removal.

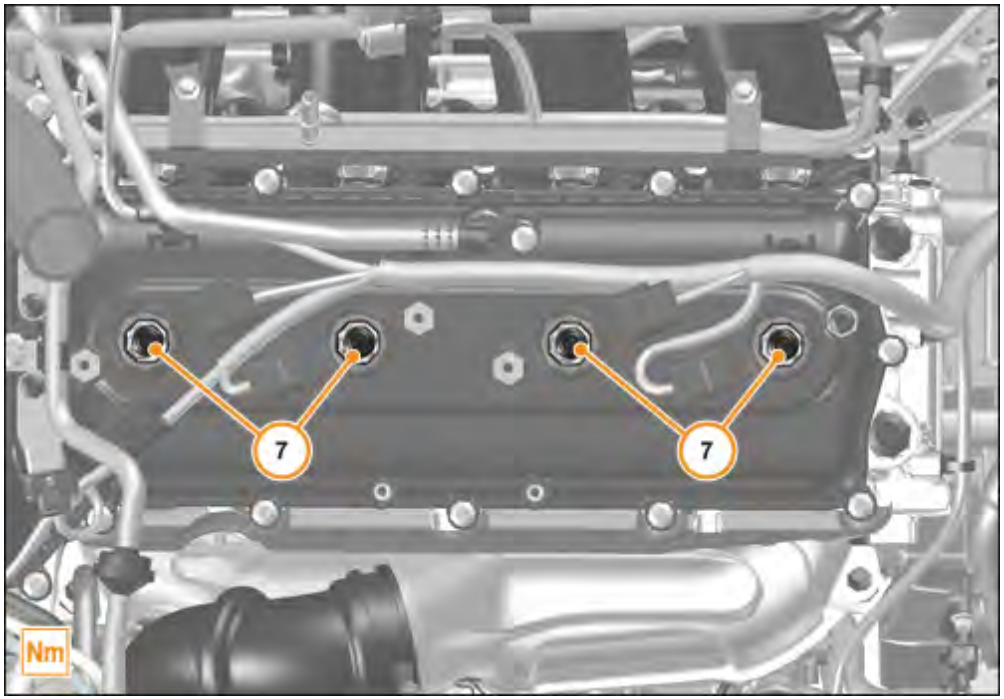

7. Remove spark plugs (7). NGK T20231A HR8 18 Nm
8. Cover holes with masking tape (6).

Install spark plug

Care Point: Ensure AV mount is tightend using the bottom hex head.

1. Replace ignition coil AV mount (8)

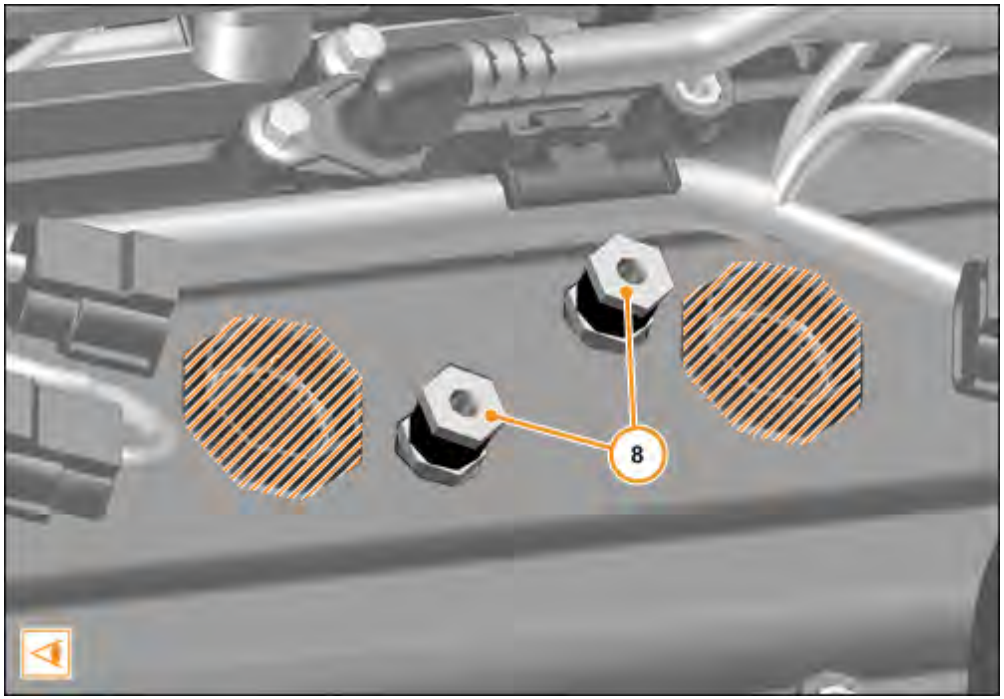

2. Check electrode distance (arrow) before you install the spark plugs (7).

Care Point: Check engine functions correctly with no misfires before installing engine side covers.

Care Point: Please follow the sequence when installing the ignition coil:
1. Ensure correct fittment of plug.
2. Rotate coil 90 degrees clockwise while applying firm downward pressure.
3. Rotate 180 degrees anti clockwise while applying firm downward pressure.
4. Rotate 90 degrees anti clockwise to sit above engine mount.

3. Install components in reverse order.

4. Read-out, delete error memory.

Torque settings

FG04 Powertrain / F01 Power Unit / Power Unit / AA-RM-04F01-01-026 - Remove/install spark plug

Description	Dimension	Value
Bolt Ignition coil - mount	M6 x 20	6 Nm
Spark plug	NGK T20231A HR8	18 Nm

Service sheet : Mileage Dependent Tasks

Please refer to this mileage chart against vehicle odometer reading whilst carrying out service

Customer:		**km / miles:**
Vehicle registration :	**VIN:**	**Date:**
Colour:		**Service Time: Task specific**
Address :		**Invoice / Job no:**

Engine compartment

Replace clutch oil and filter (Every 30,000km only or 20,000 miles only)	**0.5 units**
Replace transmission oil and clean filter (Every 60,000 km or 40,000 miles only)	**0.5 units**
Replace engine spark plugs (Every 90,000 km or 60,000 miles only)	**2.8 units**
Replace fuel system filter (Every 90,000 km or 60,000 miles only)	**8.2 units**
Clean out condensor area (Every 90,000 km or 60,000 miles only)	**1.1 units**

Associated Documents

Document Number	Document Title
AA-RM-02A03-04-006	Remove/install side cover - Engine compartment cover
AA-RM-02A04-04-008	Remove/install transmission floor panel
AA-RM-04G01-01-015	Drain and refill - Clutch fluid
AA-RM-04G01-01-017	Remove/install filter - Clutch fluid
AA-RM-04G01-01-014	Remove/install fluid - Transmission
AA-RM-04G01-01-016	Remove/install filter - Transmission fluid
AA-RM-04F01-01-026	Remove/install Spark plug
AA-RM-02A02-02-005	Remove/install Radiator grille
AA-RM-03K01-01-001	Remove/install Fuel filter

Consumables / Sundries

Comments

Technician Name:	
Technician Signature:	**Dealer Stamp:**

Printed copy is not controlled

Service sheet : 1st year or 15,000 km (10,000 miles)

Please check vehicle odometer reading against mileage dependant task service sheet before carrying out service

Customer:		**km / miles:**
Vehicle registration :	**VIN:**	**Date:**
Colour:		**Service Time: 5.85 units**
Address :		**Invoice / Job no:**

Vehicle acceptance (customer present from 1.1 to 1.4)

1.0 - Vehicle pre-checks	**Completed**	**Not Completed**	**Comments**
1.1 Check for wheel locking key (if supplied)	○	○	
1.2 Check tyre orientation, damage, and crack formations	○	○	
1.3 Inspect wheel rim condition	○	○	
1.4 Check bodywork	○	○	
1.5 Check McLaren Retailer Portal for any outstanding campaigns on vehicle	○	○	

Check paint and panels for defects - please mark the picture as following: (D dent - S scratch - X damage)

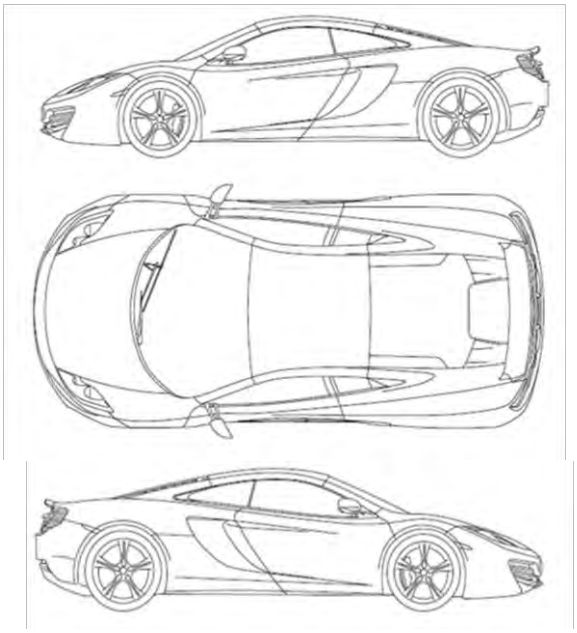

Vehicle exterior/fluid and battery checks - (ensure battery charger and body protection are fitted)

2.0 - Two technicians will be required for steps 2.1 and 2.2	**Completed**	**Not Completed**	**Comments**
2.1 Check exterior lighting function	○	○	
2.2 Check headlamp/windscreen washer system	○	○	
2.3 Check headlamp adjustment - Ref. AA-RM-02A02-04-003	○	○	
2.4 Replace wiper blade	○	○	
2.5 Check window glazing	○	○	
2.6 Check exterior light glazing	○	○	
2.7 Check gaps and seals of doors, engine cover, and luggage compartment lid	○	○	
2.8 Check fuel filler flap manual opening	○	○	

	Completed	Not Completed	Comments
2.9 Check controls and adjusters in general (hinges, doors, luggage lid and engine cover)	○	○	
2.10 Check battery connections and charge (physical check) - Ref. AA-RM-02A02-03-004	○	○	
2.11 Check cabin filter (replace as required) - Ref. AA-RM-02A02-03-004	○	○	
2.12 Check/adjust fluid level of brake system	○	○	
2.13 Check/adjust fluid level of power steering - Ref. AA-RM-03D01-01-008	○	○	
2.14 Check/adjust fluid level of windshield washer system	○	○	

Interior function checks

3.0 - Carry out cluster checks	Completed	Not Completed	Comments
3.1 Check battery condition	○	○	
3.2 Check engine oil level - Ref. AA-RM-04F02-01-007	○	○	
3.3 Check TPMS (Tyre Pressure Monitoring System)	○	○	
3.4 Check indicator lamps and warning lamps	○	○	
4.0 - Carry out IRIS checks	**Completed**	**Not Completed**	**Comments**
4.1 Check operation of IRIS system (audio/phone/sat nav/pc/cameras)	○	○	
5.0 - Carry out interior functional checks	**Completed**	**Not Completed**	**Comments**
5.1 Check central locking and alarm system	○	○	
5.2 Check interior controls (switches, lights, windows) and parking sensors (if fitted)	○	○	
5.3 Check heated rear window function	○	○	
5.4 Check operation of heating, ventilation and air conditioning system	○	○	
5.5 Check condition of interior trim (seats, door casings, centre console, facia, carpets)	○	○	
5.6 Check exterior door mirrors function and powerfold, rear view mirror, and sun visors	○	○	
5.7 Check condition and operation of seat belts/buckles (ensure belts are not twisted)	○	○	
5.8 Check brake pedal free play	○	○	
5.9 Check operation of EPB (Electronic Parking Brake)	○	○	

Mechanical checks

6.0 - Secure/lift vehicle on lifting platform - Ref. AA-RM-02A04-04-005					Completed	Not Completed	Comments
6.1 Check/enter tyre pressure	FL:	FR:	RL:	RR:	○	○	
6.2 Measure tread depth (mm)	FL:	FR:	RL:	RR:	○	○	
Outside							
Center							
Inside							
6.3 Check front/rear axle wheel bearing play					○	○	
6.4 Check front/rear ball joints for play					○	○	
6.5 Check front/rear track rods for play					○	○	

7.0 - Remove wheels - Ref. AA-RM-03B03-01-001	Completed	Not Completed	Comments
7.1 Check brake pads (replace if necessary)	○	○	
7.2 Check condition of brake discs (weigh all of them if CCM) - Ref. AA-RM-03C01-01-006	○	○	
7.3 Check EPB (Electronic Parking Brake) pads (replace if required)	○	○	
7.4 Check brake system for routing, leaks, and damage (bleed brakes if required)	○	○	
7.5 Check/clean air ducts of brake system	○	○	
8.0 - Remove all under floors - Ref. AA-RM-02A04-04-001/002/003/005/006/008	**Completed**	**Not Completed**	**Comments**
8.1 Check all visible parts for routing, leaks, and damage (cooling system)	○	○	
8.2 Check powertrain system for leaks (engine, transmission, and exhaust)	○	○	
8.3 Check all visible steering components for leaks and damage	○	○	
8.4 Check engine mounts	○	○	
8.5 Tighten screws, nuts, and bolts (including exhaust system, clips and strips in general)	○	○	
8.6 Check torques on suspension - Ref. AA-RM-03B01-02-002/003, 03B02-01-001/002	○	○	
8.7 Check condition of drive shafts	○	○	
9.0 - Remove rear wheel arch liners (carry out steps 9.2 to 9.6 while oil is draining)	**Completed**	**Not Completed**	**Comments**
9.1 Drain engine oil - Ref. AA-RM-04F02-01-011	○	○	
9.2 Check Z-bar drop links for play	○	○	
9.3 Check/clean air filter elements (replace as required) - Ref. AA-RM-04F01-02-002	○	○	
9.4 Check transmission and clutch fluids are not overfilled	○	○	
9.5 Check front lower exhaust manifold nuts/studs and exhaust manifold	○	○	
9.6 Check radiator/low temp cooler condition, check for any damage (clean as necessary)	○	○	
10.0 - Lower vehicle	**Completed**	**Not Completed**	**Comments**
10.1 Replace engine oil filter - Ref. AA-RM-04F02-01-003	○	○	
10.2 Fill engine oil (5 litres to start) - Ref. AA-RM-04F02-01-011	○	○	
10.3 Check engine oil level - Ref. AA-RM-04F02-01-007	○	○	
10.4 Top up and recheck level as required	○	○	
11.0 - Lift vehicle	**Completed**	**Not Completed**	**Comments**
11.1 Visual inspection for general leaks	○	○	

Underside of vehicle

12.0 - Install all under floors - Ref. AA-RM-02A04-04-001/002/003/005/006/008	Completed	Not Completed	Comments
12.1 Check tyre orientation, damage, and crack formations	○	○	
12.2 Install wheels - Ref. AA-RM-03B03-01-001	○	○	
13.0 - Lower vehicle to ground	**Completed**	**Not Completed**	**Comments**
13.1 Check wheel bolt torque values (130 Nm)	○	○	
13.2 Replace engine ISG (Intake Sound Generator) - Ref. AA-RM-04F01-01-037	○	○	
13.3 Check corrosion/antifreeze protection and enter here: °C	○	○	
13.4 Check exhaust emission label (market specific)	○	○	
13.5 Check injection/ignition system connections and harness	○	○	
13.6 Check/adjust fluid level of cooling system	○	○	
13.7 Check vehicle steering alignment (adjust as required)	○	○	
14.0 - Road test (carry out 14.1 and 14.2 whilst on test. Max 30 min / 6 miles)	**Completed**	**Not Completed**	**Comments**
14.1 Check airbrake function	○	○	
14.2 Check navigation system (if fitted)	○	○	
15.0 - Finish road test and carry out documents/safety device/final checks	**Completed**	**Not Completed**	**Comments**
15.1 Replace key fob battery and clean contacts with Electrolube CCS	○	○	
15.2 Check function of all keys, locks, and fobs	○	○	
15.3 Check for towing eye	○	○	
15.4 Read out fault memory, clear errors, and zero service interval counter via MDS	○	○	
15.5 Report and rectify all recorded defects	○	○	
15.6 Check/stamp service and warranty guide	○	○	

Associated Documents

Step Reference	Document Number	Document Title
2.3	AA-RM-02A02-04-003	Adjust headlamp
2.10 and 2.11	AA-RM-02A02-03-004	Remove/install luggage bin - Rear
2.13	AA-RM-03D01-01-008	Fill/bleed fluid - Steering system
6.0	AA-RM-02A04-04-007	Secure/lift vehicle on lifting platform
7.0 and 12.2	AA-RM-03B03-01-001	Remove/install Wheel
7.2	AA-RM-03C01-01-006	Cleaning/checking CCM brake discs
8.0 and 12.0	AA-RM-02A04-04-001	Remove/install floor panel - Engine/fuel tank
8.0 and 12.0	AA-RM-02A04-04-002	Remove/install floor panel - Front
8.0 and 12.0	AA-RM-02A04-04-003	Remove/install floor panel - Tunnel
8.0 and 12.0	AA-RM-02A04-04-005	Remove/install floor panel - Rear lower extension
8.0 and 12.0	AA-RM-02A04-04-006	Remove/install guide vane
8.0 and 12.0	AA-RM-02A04-04-008	Remove/install transmission floor panel
8.6	AA-RM-03B01-02-002	Remove/install lower wishbone - front
8.6	AA-RM-03B01-02-003	Remove/install upper wishbone - front
8.6	AA-RM-03B02-01-001	Remove/install upper wishbone - rear
8.6	AA-RM-03B02-01-002	Remove/install lower wishbone - rear
9.1 and 10.2	AA-RM-04F02-01-011	Drain and refill engine oil
9.3	AA-RM-04F01-02-002	Remove/install air filter
10.1	AA-RM-04F02-01-003	Remove/install Oil Filter
10.3	AA-RM-04F02-01-007	Check engine oil level
13.2	AA-RM-04F01-01-037	Remove/install intake sound generator

Consumables / Sundries	
Comments	
Technician Name: **Technician Signature:**	**Dealer Stamp:**

Printed copy is not controlled

Service sheet : 2nd year or 30,000 km (20,000 miles)

Please check vehicle odometer reading against mileage dependant task service sheet before carrying out service

Customer:		**km / miles:**
Vehicle registration :	**VIN:**	**Date:**
Colour:		**Service Time: 6.8 units**
Address :		**Invoice / Job no:**

Vehicle acceptance (customer present from 1.1 to 1.4)

1.0 - Vehicle pre-checks	**Completed**	**Not Completed**	**Comments**
1.1 Check for wheel locking key (if supplied)	○	○	
1.2 Check tyre orientation, damage, and crack formations	○	○	
1.3 Inspect wheel rim condition	○	○	
1.4 Check bodywork	○	○	
1.5 Check McLaren Retailer Portal for any outstanding campaigns on vehicle	○	○	

Check paint and panels for defects - please mark the picture as following: (D dent - S scratch - X damage)

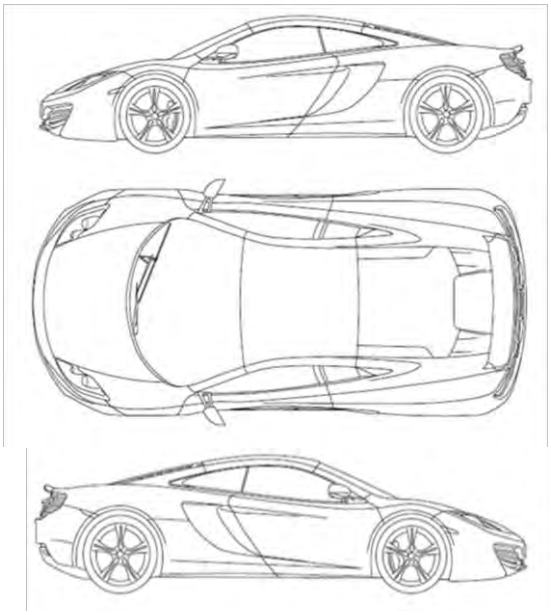

Vehicle exterior/fluid and battery checks - (ensure battery charger and body protection are fitted)

2.0 - Two technicians will be required for steps 2.1 and 2.2	**Completed**	**Not Completed**	**Comments**
2.1 Check exterior lighting function	○	○	
2.2 Check headlamp/windscreen washer system	○	○	
2.3 Check headlamp adjustment - Ref. AA-RM-02A02-04-003	○	○	
2.4 Replace wiper blade	○	○	
2.5 Check window glazing	○	○	
2.6 Check exterior light glazing	○	○	
2.7 Check gaps and seals of doors, engine cover, and luggage compartment lid	○	○	
2.8 Check fuel filler flap manual opening	○	○	

	Completed	Not Completed	Comments
2.9 Check controls and adjusters in general (hinges, doors, luggage lid and engine cover)	○	○	
2.10 Check battery connections and charge (physical check) - Ref. AA-RM-02A02-03-004	○	○	
2.11 Replace cabin filter - Ref. AA-RM-02A02-03-004	○	○	
2.12 Bleed brake fluid system as required (while servicing) - Ref. AA-RM-03C01-01-005	○	○	
2.13 Check/adjust fluid level of power steering - Ref. AA-RM-03D01-01-008	○	○	
2.14 Check/adjust fluid level of windshield washer system	○	○	

Interior function checks

3.0 - Carry out cluster checks	Completed	Not Completed	Comments
3.1 Check battery condition	○	○	
3.2 Check engine oil level - Ref. AA-RM-04F02-01-007	○	○	
3.3 Check TPMS (Tyre Pressure Monitoring System)	○	○	
3.4 Check indicator lamps and warning lamps	○	○	
4.0 - Carry out IRIS checks	**Completed**	**Not Completed**	**Comments**
4.1 Check operation of IRIS system (audio/phone/sat nav/pc/cameras)	○	○	
5.0 - Carry out interior functional checks	**Completed**	**Not Completed**	**Comments**
5.1 Check central locking and alarm system	○	○	
5.2 Check interior controls (switches, lights, windows) and parking sensors (if fitted)	○	○	
5.3 Check heated rear window function	○	○	
5.4 Check operation of heating, ventilation and air conditioning system	○	○	
5.5 Check condition of interior trim (seats, door casings, centre console, facia, carpets)	○	○	
5.6 Check exterior door mirrors function and powerfold, rear view mirror, and sun visors	○	○	
5.7 Check condition and operation of seat belts/buckles (ensure belts are not twisted)	○	○	
5.8 Check brake pedal free play	○	○	
5.9 Check operation of EPB (Electronic Parking Brake)	○	○	

Mechanical checks

6.0 - Secure/lift vehicle on lifting platform - Ref. AA-RM-02A04-04-005					Completed	Not Completed	Comments
6.1 Check/enter tyre pressure	FL:	FR:	RL:	RR:	○	○	
6.2 Measure tread depth (mm)	FL:	FR:	RL:	RR:	○	○	
Outside							
Center							
Inside							
6.3 Check front/rear axle wheel bearing play					○	○	
6.4 Check front/rear ball joints for play					○	○	
6.5 Check front/rear track rods for play					○	○	

7.0 - Remove wheels - Ref. AA-RM-03B03-01-001	**Completed**	**Not Completed**	**Comments**
7.1 Check brake pads (replace if necessary)	○	○	
7.2 Check condition of brake discs (weigh all of them if CCM) - Ref. AA-RM-03C01-01-006	○	○	
7.3 Replace electronic parking brake pads (every 2 years) - Ref. AA-RM-03C02-01-001	○	○	
7.4 Check brake system for leaks/damage (bleed as required) - Ref. AA-RM-03C01-01-005	○	○	
7.5 Check/clean air ducts of brake system	○	○	
8.0 - Remove all under floors - Ref. AA-RM-02A04-04-001/002/003/005/006/008	**Completed**	**Not Completed**	**Comments**
8.1 Check all visible parts for routing, leaks, and damage (cooling system)	○	○	
8.2 Check powertrain system for leaks (engine, transmission, and exhaust)	○	○	
8.3 Check all visible steering components for leaks and damage	○	○	
8.4 Check engine mounts	○	○	
8.5 Tighten screws, nuts, and bolts (including exhaust system, clips and strips in general)	○	○	
8.6 Check torques on suspension - Ref. AA-RM-03B01-02-002/003, 03B02-01-001/002	○	○	
8.7 Check condition of drive shafts	○	○	
9.0 - Remove rear wheel arch liners (carry out steps 9.2 to 9.6 while oil is draining)	**Completed**	**Not Completed**	**Comments**
Replace clutch oil and filter (Every 30,000km or 20,000 miles only)			
9.1 Drain engine oil - Ref. AA-RM-04F02-01-011	○	○	
9.2 Check Z-bar drop links for play	○	○	
9.3 Replace air filter - Ref. AA-RM-04F01-02-002	○	○	
9.4 Check radiator/low temp cooler condition, check for any damage (clean as necessary)	○	○	
9.5 Check transmission and clutch fluids (when mileage is not achieved) are not overfilled	○	○	
9.6 Replace clutch oil and filter (only if mileage achieved) - Ref. AA-RM-04G01-01-015/021	○	○	
9.7 Visually check condensor area for debris	○	○	
10.0 - Lower vehicle	**Completed**	**Not Completed**	**Comments**
10.1 Replace engine oil filter - Ref. AA-RM-04F02-01-003	○	○	
10.2 Fill engine oil (5 litres to start) - Ref. AA-RM-04F02-01-011	○	○	
10.3 Check engine oil level - Ref. AA-RM-04F02-01-007	○	○	
10.4 Top up and re-check level as required	○	○	
11.0 - Lift vehicle	**Completed**	**Not Completed**	**Comments**
11.1 Visual inspection for general leaks	○	○	

Underside of vehicle

12.0 - Install all under floors - Ref. AA-RM-02A04-04-001/002/003/005/006/008	Completed	Not Completed	Comments
12.1 Check tyre orientation, damage, and crack formations	○	○	
12.2 Replace wheel nut bolts	○	○	
12.3 Install wheels - Ref. AA-RM-03B03-01-001	○	○	
13.0 - Lower vehicle to ground	**Completed**	**Not Completed**	**Comments**
13.1 Check wheel bolt torque values (130 Nm)	○	○	
13.2 Replace engine ISG (Intake Sound Generator) - Ref. AA-RM-04F01-01-037	○	○	
13.3 Check corrosion/antifreeze protection and enter here: °C	○	○	
13.4 Check exhaust emission label (market specific)	○	○	
13.5 Check injection/ignition system connections and harness	○	○	
13.6 Check/adjust fluid level of cooling system	○	○	
13.7 Check vehicle steering alignment (adjust as required)	○	○	
14.0 - Road test (carry out 14.1 and 14.2 whilst on test. Max 30 min / 6 miles)	**Completed**	**Not Completed**	**Comments**
14.1 Check airbrake function	○	○	
14.2 Check navigation system (if fitted)	○	○	
15.0 - Finish road test and carry out documents/safety device/final checks	**Completed**	**Not Completed**	**Comments**
15.1 Replace key fob battery and clean contacts with Electrolube CCS	○	○	
15.2 Check function of all keys, locks, and fobs	○	○	
15.3 Check for towing eye	○	○	
15.4 Read out fault memory, clear errors, and zero service interval counter via MDS	○	○	
15.5 Report and rectify all recorded defects	○	○	
15.6 Check/stamp service and warranty guide	○	○	

Associated Documents

Step Reference	Document Number	Document Title
2.10 and 2.11	AA-RM-02A02-03-004	Remove/install luggage bin - Rear
2.12 and 7.4	AA-RM-03C01-01-005	Fill/bleed fluid - Brake system
2.13	AA-RM-03D01-01-008	Fill/bleed fluid - Steering system
6.0	AA-RM-02A04-04-007	Secure/lift vehicle on lifting platform
7.0 and 12.3	AA-RM-03B03-01-001	Remove/install Wheel
7.2	AA-RM-03C01-01-006	Cleaning/checking CCM brake discs
7.3	AA-RM-03C02-01-001	Remove/install pads - parking brake
8.0 and 12.0	AA-RM-02A04-04-001	Remove/install floor panel - Engine/fuel tank
8.0 and 12.0	AA-RM-02A04-04-002	Remove/install floor panel - Front
8.0 and 12.0	AA-RM-02A04-04-003	Remove/install floor panel - Tunnel
8.0 and 12.0	AA-RM-02A04-04-005	Remove/install floor panel - Rear lower extension
8.0 and 12.0	AA-RM-02A04-04-006	Remove/install guide vane
8.0 and 12.0	AA-RM-02A04-04-008	Remove/install transmission floor panel
8.6	AA-RM-03B01-02-002	Remove/install lower wishbone - front
8.6	AA-RM-03B01-02-003	Remove/install upper wishbone - front
8.6	AA-RM-03B02-01-001	Remove/install upper wishbone - rear
8.6	AA-RM-03B02-01-002	Remove/install lower wishbone - rear
9.1 and 10.2	AA-RM-04F02-01-011	Drain and refill engine oil
9.3	AA-RM-04F01-02-002	Remove/install air filter
9.7	AA-RM-04G01-01-015	Remove/install fluid - Transmission / Clutch
9.7	AA-RM-04G01-01-017	Remove/install filter - Transmission / Clutch fluid
10.1	AA-RM-04F02-01-003	Remove/install Oil Filter
10.3	AA-RM-04F02-01-007	Check engine oil level
13.2	AA-RM-04F01-01-037	Remove/install intake sound generator

Consumables / Sundries	
Comments	
Technician Name: **Technician Signature:**	**Dealer Stamp:**

Printed copy is not controlled

Service sheet : 3rd year or 45,000 km (30,000 miles)

Please check vehicle odometer reading against mileage dependant task service sheet before carrying out service

Customer:		**km / miles:**
Vehicle registration :	**VIN:**	**Date:**
Colour:		**Service Time: 6.55 units**
Address :		**Invoice / Job no:**

Vehicle acceptance (customer present from 1.1 to 1.4)

1.0 - Vehicle pre-checks	**Completed**	**Not Completed**	**Comments**
1.1 Check for wheel locking key (if supplied)	○	○	
1.2 Check tyre orientation, damage, and crack formations	○	○	
1.3 Inspect wheel rim condition	○	○	
1.4 Check bodywork	○	○	
1.5 Check McLaren Retailer Portal for any outstanding campaigns on vehicle	○	○	

Check paint and panels for defects - please mark the picture as following: (D dent - S scratch - X damage)

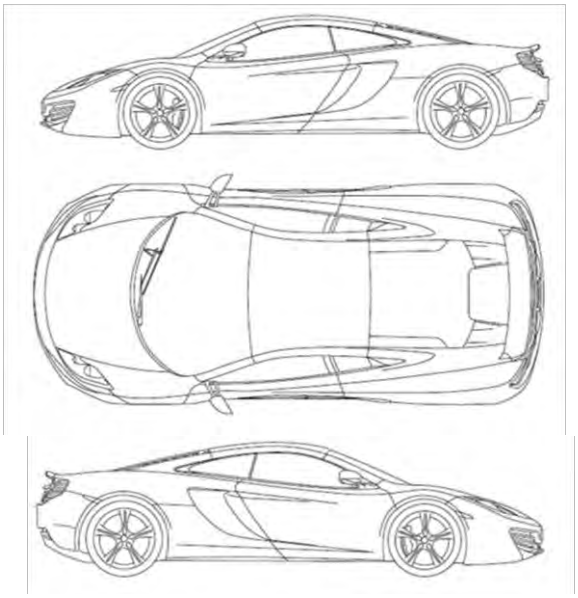

Vehicle exterior/fluid and battery checks - (ensure battery charger and body protection are fitted)

2.0 - Two technicians will be required for steps 2.1 and 2.2	**Completed**	**Not Completed**	**Comments**
2.1 Check exterior lighting function	○	○	
2.2 Check headlamp/windscreen washer system	○	○	
2.3 Check headlamp adjustment - Ref. AA-RM-02A02-04-003	○	○	
2.4 Replace wiper blade	○	○	
2.5 Check window glazing	○	○	
2.6 Check exterior light glazing	○	○	
2.7 Check gaps and seals of doors, engine cover, and luggage compartment lid	○	○	
2.8 Check fuel filler flap manual opening	○	○	

	Completed	Not Completed	Comments
2.9 Check controls and adjusters in general (hinges, doors, luggage lid and engine cover)	○	○	
2.10 Check battery connections and charge (physical check) - Ref. AA-RM-02A02-03-004	○	○	
2.11 Check cabin filter (replace as required) - Ref. AA-RM-02A02-03-004	○	○	
2.12 Check/adjust fluid level of brake system	○	○	
2.13 Check/adjust fluid level of power steering - Ref. AA-RM-03D01-01-008	○	○	
2.14 Check/adjust fluid level of windshield washer system	○	○	

Interior function checks

3.0 - Carry out cluster checks	**Completed**	**Not Completed**	**Comments**
3.1 Check battery condition	○	○	
3.2 Check engine oil level - Ref. AA-RM-04F02-01-007	○	○	
3.3 Check TPMS (Tyre Pressure Monitoring System)	○	○	
3.4 Check indicator lamps and warning lamps	○	○	
4.0 - Carry out IRIS checks	**Completed**	**Not Completed**	**Comments**
4.1 Check operation of IRIS system (audio/phone/sat nav/pc/cameras)	○	○	
5.0 - Carry out interior functional checks	**Completed**	**Not Completed**	**Comments**
5.1 Check central locking and alarm system	○	○	
5.2 Check interior controls (switches, lights, windows) and parking sensors (if fitted)	○	○	
5.3 Check heated rear window function	○	○	
5.4 Check operation of heating, ventilation and air conditioning system	○	○	
5.5 Check condition of interior trim (seats, door casings, centre console, facia, carpets)	○	○	
5.6 Check exterior door mirrors function and powerfold, rear view mirror, and sun visors	○	○	
5.7 Check condition and operation of seat belts/buckles (ensure belts are not twisted)	○	○	
5.8 Check brake pedal free play	○	○	
5.9 Check operation of EPB (Electronic Parking Brake)	○	○	

Mechanical checks

6.0 - Secure/lift vehicle on lifting platform - Ref. AA-RM-02A04-04-005					**Completed**	**Not Completed**	**Comments**
6.1 Check/enter tyre pressure	FL:	FR:	RL:	RR:	○	○	
6.2 Measure tread depth (mm)	FL:	FR:	RL:	RR:	○	○	
Outside							
Center							
Inside							
6.3 Check front/rear axle wheel bearing play					○	○	
6.4 Check front/rear ball joints for play					○	○	
6.5 Check front/rear track rods for play					○	○	

7.0 - Remove wheels - Ref. AA-RM-03B03-01-001	Completed	Not Completed	Comments
7.1 Check brake pads (replace if necessary)	○	○	
7.2 Check condition of brake discs (weigh all of them if CCM) - Ref. AA-RM-03C01-01-006	○	○	
7.3 Check EPB (Electronic Parking Brake) pads (replace if required)	○	○	
7.4 Check brake system for leaks/damage (bleed as required) - Ref. AA-RM-03C01-01-005	○	○	
7.5 Check/clean air ducts of brake system	○	○	
8.0 - Remove all under floors - Ref. AA-RM-02A04-04-001/002/003/005/006/008	**Completed**	**Not Completed**	**Comments**
8.1 Check all visible parts for routing, leaks, and damage (cooling system)	○	○	
8.2 Check powertrain system for leaks (engine, transmission, and exhaust)	○	○	
8.3 Check all visible steering components for leaks and damage	○	○	
8.4 Check engine mounts	○	○	
8.5 Tighten screws, nuts, and bolts (including exhaust system, clips and strips in general)	○	○	
8.6 Check torques on suspension - Ref. AA-RM-03B01-02-002/003, 03B02-01-001/002	○	○	
8.7 Check condition of drive shafts	○	○	
9.0 - Remove rear wheel arch liners (carry out steps 9.2 to 9.6 while oil is draining)	**Completed**	**Not Completed**	**Comments**
Replace cooling system fluid			
9.1 Drain engine oil - Ref. AA-RM-04F02-01-011	○	○	
9.2 Check Z-bar drop links for play	○	○	
9.3 Check/clean air filter elements (replace as required) - Ref. AA-RM-04F01-02-002	○	○	
9.4 Check transmission and clutch fluids are not overfilled	○	○	
9.5 Check radiator/low temp cooler condition, check for any damage (clean as necessary)	○	○	
9.6 Replace cooling system fluid - Ref. AA-RM-03L01-01-005	○	○	
10.0 - Lower vehicle	**Completed**	**Not Completed**	**Comments**
10.1 Replace engine oil filter - Ref. AA-RM-04F02-01-003	○	○	
10.2 Fill engine oil (5 litres to start) - Ref. AA-RM-04F02-01-011	○	○	
10.3 Check engine oil level - Ref. AA-RM-04F02-01-007	○	○	
10.4 Top up and recheck level as required	○	○	
11.0 - Lift vehicle	**Completed**	**Not Completed**	**Comments**
11.1 Visual inspection for general leaks	○	○	

Underside of vehicle

12.0 - Install all under floors - Ref. AA-RM-02A04-04-001/002/003/005/006/008	Completed	Not Completed	Comments
12.1 Check tyre orientation, damage, and crack formations	○	○	
12.2 Install wheels - Ref. AA-RM-03B03-01-001	○	○	
13.0 - Lower vehicle to ground	**Completed**	**Not Completed**	**Comments**
13.1 Check wheel bolt torque values (130 Nm)	○	○	
13.2 Replace engine ISG (Intake Sound Generator) - Ref. AA-RM-04F01-01-037	○	○	
13.3 Check corrosion/antifreeze protection and enter here: °C	○	○	
13.4 Check exhaust emission label (market specific)	○	○	
13.5 Check injection/ignition system connections and harness	○	○	
13.6 Check vehicle steering alignment (adjust as required)	○	○	
14.0 - Road test (carry out 14.1 and 14.2 whilst on test. Max 30 min / 6 miles)	**Completed**	**Not Completed**	**Comments**
14.1 Check airbrake function	○	○	
14.2 Check navigation system (if fitted)	○	○	
15.0 - Finish road test and carry out documents/safety device/final checks	**Completed**	**Not Completed**	**Comments**
15.1 Replace key fob battery and clean contacts with Electrolube CCS	○	○	
15.2 Check function of all keys, locks, and fobs	○	○	
15.3 Check for towing eye	○	○	
15.4 Check expiry dates of fire extinguisher/tyre inflation kit (if fitted)	○	○	
15.5 Read out fault memory, clear errors, and zero service interval counter via MDS	○	○	
15.6 Report and rectify all recorded defects	○	○	
15.7 Check/stamp service and warranty guide	○	○	

Associated Documents

Step Reference	Document Number	Document Title
2.3	AA-RM-02A02-04-003	Adjust headlamp
2.10 and 2.11	AA-RM-02A02-03-004	Remove/install luggage bin - Rear
2.13	AA-RM-03D01-01-008	Fill/bleed fluid - Steering system
6.0	AA-RM-02A04-04-007	Secure/lift vehicle on lifting platform
7.0 and 12.2	AA-RM-03B03-01-001	Remove/install Wheel
7.2	AA-RM-03C01-01-006	Cleaning/checking CCM brake discs
8.0 and 12.0	AA-RM-02A04-04-001	Remove/install floor panel - Engine/fuel tank
8.0 and 12.0	AA-RM-02A04-04-002	Remove/install floor panel - Front
8.0 and 12.0	AA-RM-02A04-04-003	Remove/install floor panel - Tunnel
8.0 and 12.0	AA-RM-02A04-04-005	Remove/install floor panel - Rear lower extension
8.0 and 12.0	AA-RM-02A04-04-006	Remove/install guide vane
8.0 and 12.0	AA-RM-02A04-04-008	Remove/install transmission floor panel
8.6	AA-RM-03B01-02-002	Remove/install lower wishbone - front
8.6	AA-RM-03B01-02-003	Remove/install upper wishbone - front
8.6	AA-RM-03B02-01-001	Remove/install upper wishbone - rear
8.6	AA-RM-03B02-01-002	Remove/install lower wishbone - rear
9.1 and 10.2	AA-RM-04F02-01-011	Drain and refill engine oil
9.3	AA-RM-04F01-02-002	Remove/install air filter
9.7	AA-RM-03L01-01-005	Drain and refill cooling system
10.1	AA-RM-04F02-01-003	Remove/install Oil Filter
10.3	AA-RM-04F02-01-007	Check engine oil level
13.2	AA-RM-04F01-01-037	Remove/install intake sound generator

Consumables / Sundries	
Comments	
Technician Name: **Technician Signature:**	**Dealer Stamp:**

Printed copy is not controlled

Service sheet : 4th year or 60,000 km (40,000 miles)

Please check vehicle odometer reading against mileage dependant task service sheet before carrying out service

Customer:		**km / miles:**
Vehicle registration :	**VIN:**	**Date:**
Colour:		**Service Time: 6.8 units**
Address :		**Invoice / Job no:**

Vehicle acceptance (customer present from 1.1 to 1.4)

1.0 - Vehicle pre-checks	**Completed**	**Not Completed**	**Comments**
1.1 Check for wheel locking key (if supplied)	○	○	
1.2 Check tyre orientation, damage, and crack formations	○	○	
1.3 Inspect wheel rim condition	○	○	
1.4 Check bodywork	○	○	
1.5 Check McLaren Retailer Portal for any outstanding campaigns on vehicle	○	○	

Check paint and panels for defects - please mark the picture as following: (D dent - S scratch - X damage)

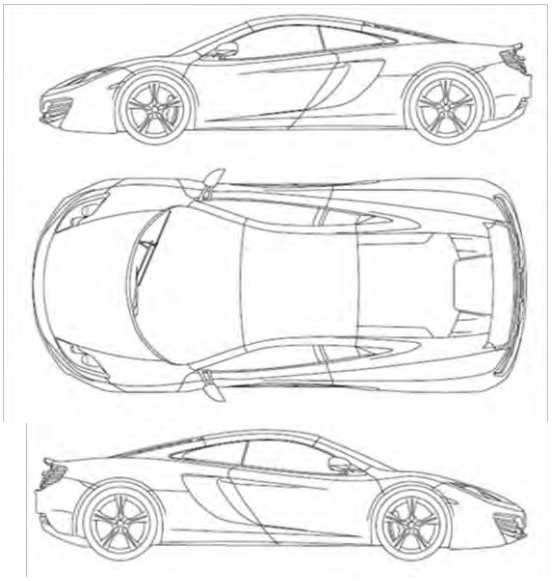

Vehicle exterior/fluid and battery checks - (ensure battery charger and body protection are fitted)

2.0 - Two technicians will be required for steps 2.1 and 2.2	**Completed**	**Not Completed**	**Comments**
2.1 Check exterior lighting function	○	○	
2.2 Check headlamp/windscreen washer system	○	○	
2.3 Check headlamp adjustment - Ref. AA-RM-02A02-04-003	○	○	
2.4 Replace wiper blade	○	○	
2.5 Check window glazing	○	○	
2.6 Check exterior light glazing	○	○	
2.7 Check gaps and seals of doors, engine cover, and luggage compartment lid	○	○	
2.8 Check fuel filler flap manual opening	○	○	

	Completed	Not Completed	Comments
2.9 Check controls and adjusters in general (hinges, doors, luggage lid and engine cover)	○	○	
2.10 Check battery connections and charge (physical check) - Ref. AA-RM-02A02-03-004	○	○	
2.11 Replace cabin filter - Ref. AA-RM-02A02-03-004	○	○	
2.12 Bleed brake fluid system as required (while servicing) - Ref. AA-RM-03C01-01-005	○	○	
2.13 Check/adjust fluid level of power steering - Ref. AA-RM-03D01-01-008	○	○	
2.14 Check/adjust fluid level of windshield washer system	○	○	

Interior function checks

3.0 - Carry out cluster checks	Completed	Not Completed	Comments
3.1 Check battery condition	○	○	
3.2 Check engine oil level - Ref. AA-RM-04F02-01-007	○	○	
3.3 Check TPMS (Tyre Pressure Monitoring System)	○	○	
3.4 Check indicator lamps and warning lamps	○	○	
4.0 - Carry out IRIS checks	**Completed**	**Not Completed**	**Comments**
4.1 Check operation of IRIS system (audio/phone/sat nav/pc/cameras)	○	○	
5.0 - Carry out interior functional checks	**Completed**	**Not Completed**	**Comments**
5.1 Check central locking and alarm system	○	○	
5.2 Check interior controls (switches, lights, windows) and parking sensors (if fitted)	○	○	
5.3 Check heated rear window function	○	○	
5.4 Check operation of heating, ventilation and air conditioning system	○	○	
5.5 Check condition of interior trim (seats, door casings, centre console, facia, carpets)	○	○	
5.6 Check exterior door mirrors function and powerfold, rear view mirror, and sun visors	○	○	
5.7 Check condition and operation of seat belts/buckles (ensure belts are not twisted)	○	○	
5.8 Check brake pedal free play	○	○	
5.9 Check operation of EPB (Electronic Parking Brake)	○	○	

Mechanical checks

6.0 - Secure/lift vehicle on lifting platform - Ref. AA-RM-02A04-04-005					Completed	Not Completed	Comments
6.1 Check/enter tyre pressure	FL:	FR:	RL:	RR:	○	○	
6.2 Measure tread depth (mm)	FL:	FR:	RL:	RR:	○	○	
Outside							
Center							
Inside							
6.3 Check front/rear axle wheel bearing play					○	○	
6.4 Check front/rear ball joints for play					○	○	
6.5 Check front/rear track rods for play					○	○	

7.0 - Remove wheels - Ref. AA-RM-03B03-01-001	Completed	Not Completed	Comments
7.1 Check brake pads (replace if necessary)	○	○	
7.2 Check condition of brake discs (weigh all of them if CCM) - Ref. AA-RM-03C01-01-006	○	○	
7.3 Replace electronic parking brake pads (every 2 years) - Ref. AA-RM-03C02-01-001	○	○	
7.4 Check brake system for leaks/damage (bleed as required) - Ref. AA-RM-03C01-01-005	○	○	
7.5 Check/clean air ducts of brake system	○	○	
8.0 - Remove all under floors - Ref. AA-RM-02A04-04-001/002/003/005/006/008	**Completed**	**Not Completed**	**Comments**
8.1 Check all visible parts for routing, leaks, and damage (cooling system)	○	○	
8.2 Check powertrain system for leaks (engine, transmission, and exhaust)	○	○	
8.3 Check all visible steering components for leaks and damage	○	○	
8.4 Check engine mounts	○	○	
8.5 Tighten screws, nuts, and bolts (including exhaust system, clips and strips in general)	○	○	
8.6 Check torques on suspension - Ref. AA-RM-03B01-02-002/003, 03B02-01-001/002	○	○	
8.7 Check condition of drive shafts	○	○	
9.0 - Remove rear wheel arch liners (carry out steps 9.2 to 9.7 while oil is draining)	**Completed**	**Not Completed**	**Comments**
Replace clutch oil and filter (Every 30,000km or 20,000 miles only)			
Replace transmission oil and clean filter (Every 60,000 km or 40,000 miles only)			
9.1 Drain engine oil - Ref. AA-RM-04F02-01-011	○	○	
9.2 Check Z-bar drop links for play	○	○	
9.3 Replace air filter - Ref. AA-RM-04F01-02-002	○	○	
9.4 Check radiator/low temp cooler condition, check for any damage (clean as necessary)	○	○	
9.5 Check transmission and clutch fluids (when mileage is not achieved) are not overfilled	○	○	
9.6 Replace clutch oil and filter (only if mileage achieved) - Ref. AA-RM-04G01-01-015/021	○	○	
9.7 Replace transmission oil / clean filter (only if mileage achieved) - Ref. AA-RM-04G01-01-014/016	○	○	
9.8 Visually check condensor area for debris	○	○	
10.0 - Lower vehicle	**Completed**	**Not Completed**	**Comments**
10.1 Replace engine oil filter - Ref. AA-RM-04F02-01-003	○	○	
10.2 Fill engine oil (5 litres to start) - Ref. AA-RM-04F02-01-011	○	○	
10.3 Check engine oil level - Ref. AA-RM-04F02-01-007	○	○	
10.4 Top up and re-check level as required	○	○	
11.0 - Lift vehicle	**Completed**	**Not Completed**	**Comments**
11.1 Visual inspection for general leaks	○	○	

Underside of vehicle

12.0 - Install all under floors - Ref. AA-RM-02A04-04-001/002/003/005/006/008	Completed	Not Completed	Comments
12.1 Check tyre orientation, damage, and crack formations	○	○	
12.2 Replace wheel nut bolts	○	○	
12.3 Install wheels - Ref. AA-RM-03B03-01-001	○	○	
13.0 - Lower vehicle to ground	**Completed**	**Not Completed**	**Comments**
13.1 Check wheel bolt torque values (130 Nm)	○	○	
13.2 Replace engine ISG (Intake Sound Generator) - Ref. AA-RM-04F01-01-037	○	○	
13.3 Check corrosion/antifreeze protection and enter here: °C	○	○	
13.4 Check exhaust emission label (market specific)	○	○	
13.5 Check injection/ignition system connections and harness	○	○	
13.6 Check/adjust fluid level of cooling system	○	○	
13.7 Check vehicle steering alignment (adjust as required)	○	○	
14.0 - Road test (carry out 14.1 and 14.2 whilst on test. Max 30 min / 6 miles)	**Completed**	**Not Completed**	**Comments**
14.1 Check airbrake function	○	○	
14.2 Check navigation system (if fitted)	○	○	
15.0 - Finish road test and carry out documents/safety device/final checks	**Completed**	**Not Completed**	**Comments**
15.1 Replace key fob battery and clean contacts with Electrolube CCS	○	○	
15.2 Check function of all keys, locks, and fobs	○	○	
15.3 Check for towing eye	○	○	
15.4 Read out fault memory, clear errors, and zero service interval counter via MDS	○	○	
15.5 Report and rectify all recorded defects	○	○	
15.6 Check/stamp service and warranty guide	○	○	

Associated Documents

Step Reference	Document Number	Document Title
2.10 and 2.11	AA-RM-02A02-03-004	Remove/install luggage bin - Rear
2.12 and 7.4	AA-RM-03C01-01-005	Fill/bleed fluid - Brake system
2.13	AA-RM-03D01-01-008	Fill/bleed fluid - Steering system
6.0	AA-RM-02A04-04-007	Secure/lift vehicle on lifting platform
7.0 and 12.3	AA-RM-03B03-01-001	Remove/install Wheel
7.2	AA-RM-03C01-01-006	Cleaning/checking CCM brake discs
7.3	AA-RM-03C02-01-001	Remove/install pads - parking brake
8.0 and 12.0	AA-RM-02A04-04-001	Remove/install floor panel - Engine/fuel tank
8.0 and 12.0	AA-RM-02A04-04-002	Remove/install floor panel - Front
8.0 and 12.0	AA-RM-02A04-04-003	Remove/install floor panel - Tunnel
8.0 and 12.0	AA-RM-02A04-04-005	Remove/install floor panel - Rear lower extension
8.0 and 12.0	AA-RM-02A04-04-006	Remove/install guide vane
8.0 and 12.0	AA-RM-02A04-04-008	Remove/install transmission floor panel
8.6	AA-RM-03B01-02-002	Remove/install lower wishbone - front
8.6	AA-RM-03B01-02-003	Remove/install upper wishbone - front
8.6	AA-RM-03B02-01-001	Remove/install upper wishbone - rear
8.6	AA-RM-03B02-01-002	Remove/install lower wishbone - rear
9.1 and 10.2	AA-RM-04F02-01-011	Drain and refill engine oil
9.3	AA-RM-04F01-02-002	Remove/install air filter
9.6	AA-RM-04G01-01-015	Drain and refill - Clutch fluid
9.6	AA-RM-04G01-01-017	Remove/install filter - Clutch fluid
9.7	AA-RM-04G01-01-014	Drain and refill - Transmission Fluid
9.7	AA-RM-04G01-01-016	Remove/install filter - Transmission fluid
10.1	AA-RM-04F02-01-003	Remove/install Oil Filter
10.3	AA-RM-04F02-01-007	Check engine oil level
13.2	AA-RM-04F01-01-037	Remove/install intake sound generator

Consumables / Sundries	
Comments	
Technician Name: **Technician Signature:**	**Dealer Stamp:**

Printed copy is not controlled

Service sheet : 5th year or 75,000 km (50,000 miles)

Please check vehicle odometer reading against mileage dependant task service sheet before carrying out service

Customer:		**km / miles:**
Vehicle registration :	**VIN:**	**Date:**
Colour:		**Service Time: 5.85 units**
Address :		**Invoice / Job no:**

Vehicle acceptance (customer present from 1.1 to 1.4)

1.0 - Vehicle pre-checks	**Completed**	**Not Completed**	**Comments**
1.1 Check for wheel locking key (if supplied)	○	○	
1.2 Check tyre orientation, damage, and crack formations	○	○	
1.3 Inspect wheel rim condition	○	○	
1.4 Check bodywork	○	○	
1.5 Check McLaren Retailer Portal for any outstanding campaigns on vehicle	○	○	

Check paint and panels for defects - please mark the picture as following: (D dent - S scratch - X damage)

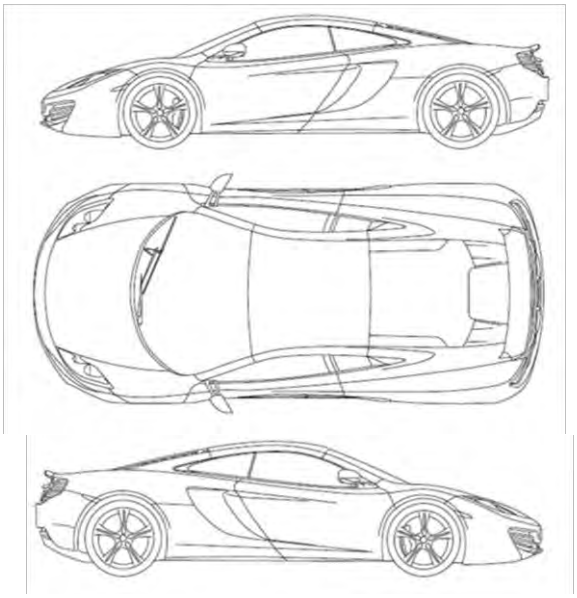

Vehicle exterior/fluid and battery checks - (ensure battery charger and body protection are fitted)

2.0 - Two technicians will be required for steps 2.1 and 2.2	**Completed**	**Not Completed**	**Comments**
2.1 Check exterior lighting function	○	○	
2.2 Check headlamp/windscreen washer system	○	○	
2.3 Check headlamp adjustment - Ref. AA-RM-02A02-04-003	○	○	
2.4 Replace wiper blade	○	○	
2.5 Check window glazing	○	○	
2.6 Check exterior light glazing	○	○	
2.7 Check gaps and seals of doors, engine cover, and luggage compartment lid	○	○	
2.8 Check fuel filler flap manual opening	○	○	

	Completed	Not Completed	Comments
2.9 Check controls and adjusters in general (hinges, doors, luggage lid and engine cover)	○	○	
2.10 Check battery connections and charge (physical check) - Ref. AA-RM-02A02-03-004	○	○	
2.11 Check cabin filter (replace as required) - Ref. AA-RM-02A02-03-004	○	○	
2.12 Check/adjust fluid level of brake system	○	○	
2.13 Check/adjust fluid level of power steering - Ref. AA-RM-03D01-01-008	○	○	
2.14 Check/adjust fluid level of windshield washer system	○	○	

Interior function checks

3.0 - Carry out cluster checks	**Completed**	**Not Completed**	**Comments**
3.1 Check battery condition	○	○	
3.2 Check engine oil level - Ref. AA-RM-04F02-01-007	○	○	
3.3 Check TPMS (Tyre Pressure Monitoring System)	○	○	
3.4 Check indicator lamps and warning lamps	○	○	
4.0 - Carry out IRIS checks	**Completed**	**Not Completed**	**Comments**
4.1 Check operation of IRIS system (audio/phone/sat nav/pc/cameras)	○	○	
5.0 - Carry out interior functional checks	**Completed**	**Not Completed**	**Comments**
5.1 Check central locking and alarm system	○	○	
5.2 Check interior controls (switches, lights, windows) and parking sensors (if fitted)	○	○	
5.3 Check heated rear window function	○	○	
5.4 Check operation of heating, ventilation and air conditioning system	○	○	
5.5 Check condition of interior trim (seats, door casings, centre console, facia, carpets)	○	○	
5.6 Check exterior door mirrors function and powerfold, rear view mirror, and sun visors	○	○	
5.7 Check condition and operation of seat belts/buckles (ensure belts are not twisted)	○	○	
5.8 Check brake pedal free play	○	○	
5.9 Check operation of EPB (Electronic Parking Brake)	○	○	

Mechanical checks

6.0 - Secure/lift vehicle on lifting platform - Ref. AA-RM-02A04-04-005					**Completed**	**Not Completed**	**Comments**
6.1 Check/enter tyre pressure	FL:	FR:	RL:	RR:	○	○	
6.2 Measure tread depth (mm)	FL:	FR:	RL:	RR:	○	○	
Outside							
Center							
Inside							
6.3 Check front/rear axle wheel bearing play					○	○	
6.4 Check front/rear ball joints for play					○	○	
6.5 Check front/rear track rods for play					○	○	

7.0 - Remove wheels - Ref. AA-RM-03B03-01-001	Completed	Not Completed	Comments
7.1 Check brake pads (replace if necessary)	○	○	
7.2 Check condition of brake discs (weigh all of them if CCM) - Ref. AA-RM-03C01-01-006	○	○	
7.3 Check EPB (Electronic Parking Brake) pads (replace if required)	○	○	
7.4 Check brake system for routing, leaks, and damage (bleed brakes if required)	○	○	
7.5 Check/clean air ducts of brake system	○	○	
8.0 - Remove all under floors - Ref. AA-RM-02A04-04-001/002/003/005/006/008	**Completed**	**Not Completed**	**Comments**
8.1 Check all visible parts for routing, leaks, and damage (cooling system)	○	○	
8.2 Check powertrain system for leaks (engine, transmission, and exhaust)	○	○	
8.3 Check all visible steering components for leaks and damage	○	○	
8.4 Check engine mounts	○	○	
8.5 Tighten screws, nuts, and bolts (including exhaust system, clips and strips in general)	○	○	
8.6 Check torques on suspension - Ref. AA-RM-03B01-02-002/003, 03B02-01-001/002	○	○	
8.7 Check condition of drive shafts	○	○	
9.0 - Remove rear wheel arch liners (carry out steps 9.2 to 9.5 while oil is draining)	**Completed**	**Not Completed**	**Comments**
9.1 Drain engine oil - Ref. AA-RM-04F02-01-011	○	○	
9.2 Check Z-bar drop links for play	○	○	
9.3 Check/clean air filter elements (replace as required) - Ref. AA-RM-04F01-02-002	○	○	
9.4 Check transmission and clutch fluids are not overfilled	○	○	
9.5 Check radiator/low temp cooler condition, check for any damage (clean as necessary)	○	○	
10.0 - Lower vehicle	**Completed**	**Not Completed**	**Comments**
10.1 Replace engine oil filter - Ref. AA-RM-04F02-01-003	○	○	
10.2 Fill engine oil (5 litres to start) - Ref. AA-RM-04F02-01-011	○	○	
10.3 Check engine oil level - Ref. AA-RM-04F02-01-007	○	○	
10.4 Top up and recheck level as required	○	○	
11.0 - Lift vehicle	**Completed**	**Not Completed**	**Comments**
11.1 Visual inspection for general leaks	○	○	

Underside of vehicle

12.0 - Install all under floors - Ref. AA-RM-02A04-04-001/002/003/005/006/008	Completed	Not Completed	Comments
12.1 Check tyre orientation, damage, and crack formations	○	○	
12.2 Install wheels - Ref. AA-RM-03B03-01-001	○	○	
13.0 - Lower vehicle to ground	**Completed**	**Not Completed**	**Comments**
13.1 Check wheel bolt torque values (130 Nm)	○	○	
13.2 Replace engine ISG (Intake Sound Generator) - Ref. AA-RM-04F01-01-037	○	○	
13.3 Check corrosion/antifreeze protection and enter here: °C	○	○	
13.4 Check exhaust emission label (market specific)	○	○	
13.5 Check injection/ignition system connections and harness	○	○	
13.6 Check/adjust fluid level of cooling system	○	○	
13.7 Check vehicle steering alignment (adjust as required)	○	○	
14.0 - Road test (carry out 14.1 and 14.2 whilst on test. Max 30 min / 6 miles)	**Completed**	**Not Completed**	**Comments**
14.1 Check airbrake function	○	○	
14.2 Check navigation system (if fitted)	○	○	
15.0 - Finish road test and carry out documents/safety device/final checks	**Completed**	**Not Completed**	**Comments**
15.1 Replace key fob battery and clean contacts with Electrolube CCS	○	○	
15.2 Check function of all keys, locks, and fobs	○	○	
15.3 Check for towing eye	○	○	
15.4 Read out fault memory, clear errors, and zero service interval counter via MDS	○	○	
15.5 Report and rectify all recorded defects	○	○	
15.6 Check/stamp service and warranty guide	○	○	

Associated Documents

Step Reference	Document Number	Document Title
2.3	AA-RM-02A02-04-003	Adjust headlamp
2.10 and 2.11	AA-RM-02A02-03-004	Remove/install luggage bin - Rear
2.13	AA-RM-03D01-01-008	Fill/bleed fluid - Steering system
6.0	AA-RM-02A04-04-007	Secure/lift vehicle on lifting platform
7.0 and 12.2	AA-RM-03B03-01-001	Remove/install Wheel
7.2	AA-RM-03C01-01-006	Cleaning/checking CCM brake discs
8.0 and 12.0	AA-RM-02A04-04-001	Remove/install floor panel - Engine/fuel tank
8.0 and 12.0	AA-RM-02A04-04-002	Remove/install floor panel - Front
8.0 and 12.0	AA-RM-02A04-04-003	Remove/install floor panel - Tunnel
8.0 and 12.0	AA-RM-02A04-04-005	Remove/install floor panel - Rear lower extension
8.0 and 12.0	AA-RM-02A04-04-006	Remove/install guide vane
8.0 and 12.0	AA-RM-02A04-04-008	Remove/install transmission floor panel
8.6	AA-RM-03B01-02-002	Remove/install lower wishbone - front
8.6	AA-RM-03B01-02-003	Remove/install upper wishbone - front
8.6	AA-RM-03B02-01-001	Remove/install upper wishbone - rear
8.6	AA-RM-03B02-01-002	Remove/install lower wishbone - rear
9.1 and 10.2	AA-RM-04F02-01-011	Drain and refill engine oil
9.3	AA-RM-04F01-02-002	Remove/install air filter
10.1	AA-RM-04F02-01-003	Remove/install Oil Filter
10.3	AA-RM-04F02-01-007	Check engine oil level
13.2	AA-RM-04F01-01-037	Remove/install intake sound generator

Consumables / Sundries	
Comments	
Technician Name: **Technician Signature:**	**Dealer Stamp:**

Printed copy is not controlled

Service sheet : 6th year or 90,000 km (60,000 miles)

Please check vehicle odometer reading against mileage dependant task service sheet before carrying out service

Customer:		**km / miles:**
Vehicle registration :	**VIN:**	**Date:**
Colour:		**Service Time: 7.65 units**
Address :		**Invoice / Job no:**

Vehicle acceptance (customer present from 1.1 to 1.4)

1.0 - Vehicle pre-checks	**Completed**	**Not Completed**	**Comments**
1.1 Check for wheel locking key (if supplied)	○	○	
1.2 Check tyre orientation, damage, and crack formations	○	○	
1.3 Inspect wheel rim condition	○	○	
1.4 Check bodywork	○	○	
1.5 Check McLaren Retailer Portal for any outstanding campaigns on vehicle	○	○	

Check paint and panels for defects - please mark the picture as following: (D dent - S scratch - X damage)

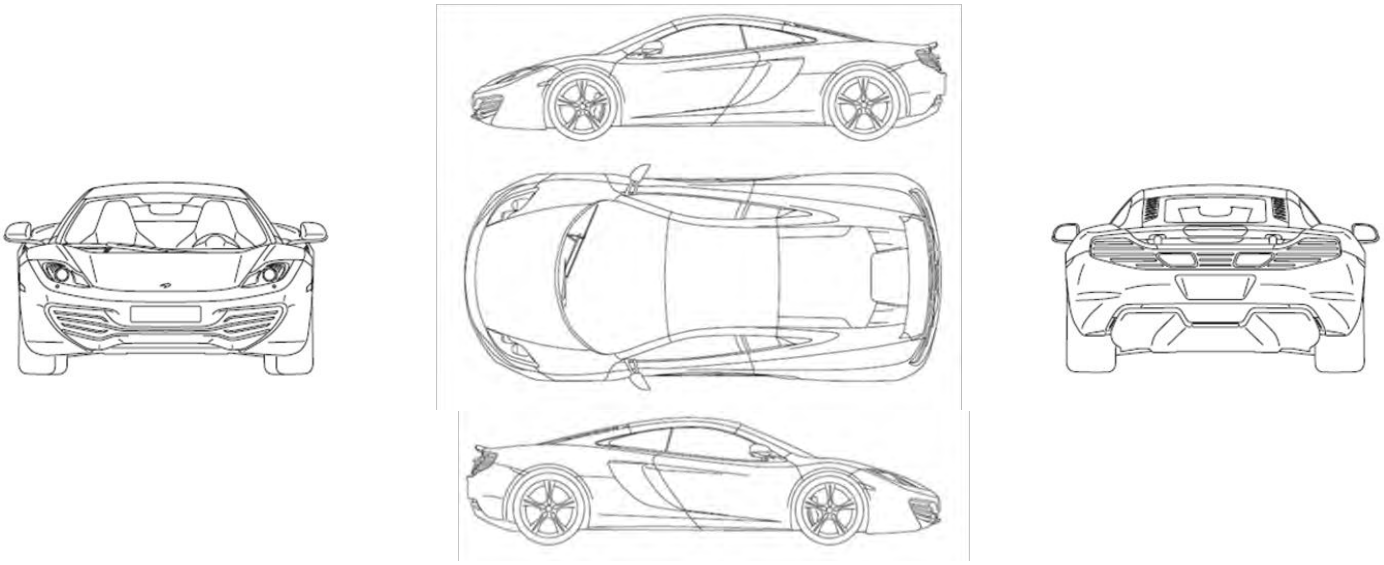

Vehicle exterior/fluid and battery checks - (ensure battery charger and body protection are fitted)

2.0 - Two technicians will be required for steps 2.1 and 2.2	**Completed**	**Not Completed**	**Comments**
2.1 Check exterior lighting function	○	○	
2.2 Check headlamp/windscreen washer system	○	○	
2.3 Check headlamp adjustment - Ref. AA-RM-02A02-04-003	○	○	
2.4 Replace wiper blade	○	○	
2.5 Check window glazing	○	○	
2.6 Check exterior light glazing	○	○	
2.7 Check gaps and seals of doors, engine cover, and luggage compartment lid	○	○	
2.8 Check fuel filler flap manual opening	○	○	
2.9 Check controls and adjusters in general (hinges, doors, luggage lid and engine cover)	○	○	
2.10 Check battery connections and charge (physical check) - Ref. AA-RM-02A02-03-004	○	○	
2.11 Replace cabin filter - Ref. AA-RM-02A02-03-004	○	○	
2.12 Check/adjust fluid level of brake system	○	○	
2.13 Check/adjust fluid level of power steering - Ref. AA-RM-03D01-01-008	○	○	
2.14 Check/adjust fluid level of windshield washer system	○	○	

Interior function checks

3.0 - Carry out cluster checks	Completed	Not Completed	Comments
3.1 Check battery condition	○	○	
3.2 Check engine oil level - Ref. AA-RM-04F02-01-007	○	○	
3.3 Check TPMS (Tyre Pressure Monitoring System)	○	○	
3.4 Check indicator lamps and warning lamps	○	○	
4.0 - Carry out IRIS checks	**Completed**	**Not Completed**	**Comments**
4.1 Check operation of IRIS system (audio/phone/sat nav/pc/cameras)	○	○	
5.0 - Carry out interior functional checks	**Completed**	**Not Completed**	**Comments**
5.1 Check central locking and alarm system	○	○	
5.2 Check interior controls (switches, lights, windows) and parking sensors (if fitted)	○	○	
5.3 Check heated rear window function	○	○	
5.4 Check operation of heating, ventilation and air conditioning system	○	○	
5.5 Check condition of interior trim (seats, door casings, centre console, facia, carpets)	○	○	
5.6 Check exterior door mirrors function and powerfold, rear view mirror, and sun visors	○	○	
5.7 Check condition and operation of seat belts/buckles (ensure belts are not twisted)	○	○	
5.8 Check brake pedal free play	○	○	
5.9 Check operation of EPB (Electronic Parking Brake)	○	○	

Mechanical checks

6.0 - Secure/lift vehicle on lifting platform - Ref. AA-RM-02A04-04-005					Completed	Not Completed	Comments
6.1 Check/enter tyre pressure	FL:	FR:	RL:	RR:	○	○	
6.2 Measure tread depth (mm)	FL:	FR:	RL:	RR:	○	○	
Outside							
Center							
Inside							
6.3 Check front/rear axle wheel bearing play					○	○	
6.4 Check front/rear ball joints for play					○	○	
6.5 Check front/rear track rods for play					○	○	
7.0 - Remove wheels - Ref. AA-RM-03B03-01-001					**Completed**	**Not Completed**	**Comments**
7.1 Check brake pads (replace if necessary)					○	○	
7.2 Check condition of brake discs (weigh all of them if CCM) - Ref. AA-RM-03C01-01-006					○	○	
7.3 Replace electronic parking brake pads (every 2 years) - Ref. AA-RM-03C02-01-001					○	○	
7.4 Check brake system for leaks/damage (bleed as required) - Ref. AA-RM-03C01-01-005					○	○	
7.5 Check/clean air ducts of brake system					○	○	
8.0 - Remove all under floors - Ref. AA-RM-02A04-04-001/002/003/005/006/008					**Completed**	**Not Completed**	**Comments**
8.1 Check all visible parts for routing, leaks, and damage (cooling system)					○	○	
8.2 Check powertrain system for leaks (engine, transmission, and exhaust)					○	○	
8.3 Check all visible steering components for leaks and damage					○	○	
8.4 Check engine mounts					○	○	
8.5 Tighten screws, nuts, and bolts (including exhaust system, clips and strips in general)					○	○	
8.6 Check torques on suspension - Ref. AA-RM-03B01-02-002/003, 03B02-01-001/002					○	○	
8.7 Check condition of drive shafts					○	○	

9.0 - Remove rear wheel arch liners (carry out steps 9.2 to 9.8 while oil is draining)	Completed	Not Completed	Comments
Replace clutch oil and filter (Every 30,000km or 20,000 miles only)			
Replace fuel system filter (Every 90,000 km or 60,000 miles only)			
Replace cooling system fluid			
9.1 Drain engine oil - Ref. AA-RM-04F02-01-011	○	○	
9.2 Check Z-bar drop links for play	○	○	
9.3 Replace air filter - Ref. AA-RM-04F01-02-002	○	○	
9.4 Check radiator/low temp cooler condition, check for any damage (clean as necessary)	○	○	
9.5 Check transmission and clutch fluids (when mileage is not achieved) are not overfilled	○	○	
9.6 Replace cooling system fluid - Ref. AA-RM-03L01-01-005	○	○	
9.7 Replace clutch oil and filter (only if mileage achieved) AA-RM-04G01-01-015/021	○	○	
9.8 Replace fuel system filter (only if mileage achieved) - Ref. AA-RM-03K01-01-001	○	○	
9.9 Visually check condensor area for debris	○	○	
9.10 Clean out condensor area (only if mileage achieved) - Ref. AA-RM-02A02-02-005	○	○	
10.0 - Lower vehicle	**Completed**	**Not Completed**	**Comments**
10.1 Replace engine oil filter - Ref. AA-RM-04F02-01-003	○	○	
10.2 Fill engine oil (5 litres to start) - Ref. AA-RM-04F02-01-011	○	○	
10.3 Check engine oil level - Ref. AA-RM-04F02-01-007	○	○	
10.4 Top up and recheck level as required	○	○	
11.0 - Lift vehicle	**Completed**	**Not Completed**	**Comments**
11.1 Visual inspection for general leaks	○	○	

Underside of vehicle

12.0 - Install all under floors - Ref. AA-RM-02A04-04-001/002/003/005/006/008	Completed	Not Completed	Comments
12.1 Check tyre orientation, damage, and crack formations	○	○	
12.2 Replace wheel nut bolts	○	○	
12.3 Install wheels - Ref. AA-RM-03B03-01-001	○	○	
13.0 - Lower vehicle to ground	**Completed**	**Not Completed**	**Comments**
Replace engine spark plugs (Every 90,000 km or 60,000 miles only)			
13.1 Check wheel bolt torque values (130 Nm)	○	○	
13.2 Replace engine ISG (Intake Sound Generator) - Ref. AA-RM-04F01-01-037	○	○	
13.3 Check corrosion/antifreeze protection and enter here: °C	○	○	
13.4 Check exhaust emission label (market specific)	○	○	
13.5 Replace engine spark plugs (only if mileage achieved) - Ref. AA-RM-04F01-01-026	○	○	
13.6 Check injection/ignition system connections and harness	○	○	
13.7 Check vehicle steering alignment (adjust as required)	○	○	
14.0 - Road test (carry out 14.1 and 14.2 whilst on test. Max 30 min / 6 miles)	**Completed**	**Not Completed**	**Comments**
14.1 Check airbrake function	○	○	
14.2 Check navigation system (if fitted)	○	○	
15.0 - Finish road test and carry out documents/safety device/final checks	**Completed**	**Not Completed**	**Comments**
15.1 Replace key fob battery and clean contacts with Electrolube CCS	○	○	
15.2 Check function of all keys, locks, and fobs	○	○	
15.3 Check for towing eye	○	○	
15.4 Check expiry dates of fire extinguisher/tyre inflation kit (if fitted)	○	○	
15.5 Read out fault memory, clear errors, and zero service interval counter via MDS	○	○	
15.6 Report and rectify all recorded defects	○	○	
15.7 Check/stamp service and warranty guide	○	○	

Associated Documents

Step Reference	Document Number	Document Title
2.3	AA-RM-02A02-04-003	Adjust headlamp
2.10 and 2.11	AA-RM-02A02-03-004	Remove/install luggage bin - Rear
2.13	AA-RM-03D01-01-008	Fill/bleed fluid - Steering system
6.0	AA-RM-02A04-04-007	Secure/lift vehicle on lifting platform
7.0 and 12.2	AA-RM-03B03-01-001	Remove/install Wheel
7.2	AA-RM-03C01-01-006	Cleaning/checking CCM brake discs
7.3	AA-RM-03C02-01-001	Remove/install pads - Parking brake
8.0 and 12.0	AA-RM-02A04-04-001	Remove/install floor panel - Engine/fuel tank
8.0 and 12.0	AA-RM-02A04-04-002	Remove/install floor panel - Front
8.0 and 12.0	AA-RM-02A04-04-003	Remove/install floor panel - Tunnel
8.0 and 12.0	AA-RM-02A04-04-005	Remove/install floor panel - Rear lower extension
8.0 and 12.0	AA-RM-02A04-04-006	Remove/install guide vane
8.0 and 12.0	AA-RM-02A04-04-008	Remove/install transmission floor panel
8.6	AA-RM-03B01-02-002	Remove/install lower wishbone - front
8.6	AA-RM-03B01-02-003	Remove/install upper wishbone - front
8.6	AA-RM-03B02-01-001	Remove/install upper wishbone - rear
8.6	AA-RM-03B02-01-002	Remove/install lower wishbone - rear
9.1 and 10.2	AA-RM-04F02-01-011	Drain and refill engine oil
9.3	AA-RM-04F01-02-002	Remove/install air filter
9.6	AA-RM-03L01-01-005	Drain and refill cooling system
9.7	AA-RM-04G01-01-015	Drain and refill - Clutch fluid
9.7	AA-RM-04G01-01-017	Remove/install filter - Clutch fluid
9.8	AA-RM-03K01-01-001	Remove/install fuel filter
9.10	AA-RM-02A02-02-005	Remove/install Radiator grille
10.1	AA-RM-04F02-01-003	Remove/install oil filter
10.3	AA-RM-04F02-01-007	Check engine oil level
13.5	AA-RM-04F01-01-026	Remove/install spark plug
13.2	AA-RM-04F01-01-037	Remove/install intake sound generator

Consumables / Sundries	
Comments	
Technician Name: **Technician Signature:**	**Dealer Stamp:**

Printed copy is not controlled

Service sheet : 7th year or 105,000 km (70,000 miles)

Please check vehicle odometer reading against mileage dependant task service sheet before carrying out service

Customer:		**km / miles:**
Vehicle registration :	**VIN:**	**Date:**
Colour:		**Service Time: 5.85 units**
Address :		**Invoice / Job no:**

Vehicle acceptance (customer present from 1.1 to 1.4)

1.0 - Vehicle pre-checks	**Completed**	**Not Completed**	**Comments**
1.1 Check for wheel locking key (if supplied)	○	○	
1.2 Check tyre orientation, damage, and crack formations	○	○	
1.3 Inspect wheel rim condition	○	○	
1.4 Check bodywork	○	○	
1.5 Check McLaren Retailer Portal for any outstanding campaigns on vehicle	○	○	

Check paint and panels for defects - please mark the picture as following: (D dent - S scratch - X damage)

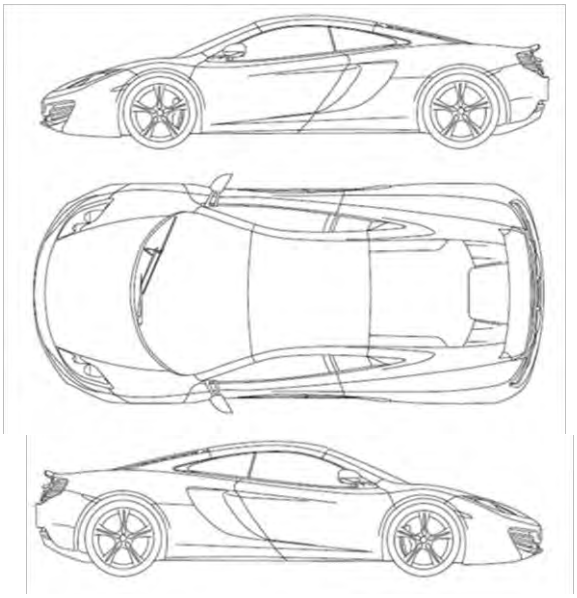

Vehicle exterior/fluid and battery checks - (ensure battery charger and body protection are fitted)

2.0 - Two technicians will be required for steps 2.1 and 2.2	**Completed**	**Not Completed**	**Comments**
2.1 Check exterior lighting function	○	○	
2.2 Check headlamp/windscreen washer system	○	○	
2.3 Check headlamp adjustment - Ref. AA-RM-02A02-04-003	○	○	
2.4 Replace wiper blade	○	○	
2.5 Check window glazing	○	○	
2.6 Check exterior light glazing	○	○	
2.7 Check gaps and seals of doors, engine cover, and luggage compartment lid	○	○	
2.8 Check fuel filler flap manual opening	○	○	

	Completed	Not Completed	Comments
2.9 Check controls and adjusters in general (hinges, doors, luggage lid and engine cover)	○	○	
2.10 Check battery connections and charge (physical check) - Ref. AA-RM-02A02-03-004	○	○	
2.11 Check cabin filter (replace as required) - Ref. AA-RM-02A02-03-004	○	○	
2.12 Check/adjust fluid level of brake system	○	○	
2.13 Check/adjust fluid level of power steering - Ref. AA-RM-03D01-01-008	○	○	
2.14 Check/adjust fluid level of windshield washer system	○	○	

Interior function checks

3.0 - Carry out cluster checks	Completed	Not Completed	Comments
3.1 Check battery condition	○	○	
3.2 Check engine oil level - Ref. AA-RM-04F02-01-007	○	○	
3.3 Check TPMS (Tyre Pressure Monitoring System)	○	○	
3.4 Check indicator lamps and warning lamps	○	○	
4.0 - Carry out IRIS checks	**Completed**	**Not Completed**	**Comments**
4.1 Check operation of IRIS system (audio/phone/sat nav/pc/cameras)	○	○	
5.0 - Carry out interior functional checks	**Completed**	**Not Completed**	**Comments**
5.1 Check central locking and alarm system	○	○	
5.2 Check interior controls (switches, lights, windows) and parking sensors (if fitted)	○	○	
5.3 Check heated rear window function	○	○	
5.4 Check operation of heating, ventilation and air conditioning system	○	○	
5.5 Check condition of interior trim (seats, door casings, centre console, facia, carpets)	○	○	
5.6 Check exterior door mirrors function and powerfold, rear view mirror, and sun visors	○	○	
5.7 Check condition and operation of seat belts/buckles (ensure belts are not twisted)	○	○	
5.8 Check brake pedal free play	○	○	
5.9 Check operation of EPB (Electronic Parking Brake)	○	○	

Mechanical checks

6.0 - Secure/lift vehicle on lifting platform - Ref. AA-RM-02A04-04-005					Completed	Not Completed	Comments
6.1 Check/enter tyre pressure	FL:	FR:	RL:	RR:	○	○	
6.2 Measure tread depth (mm)	FL:	FR:	RL:	RR:	○	○	
Outside							
Center							
Inside							
6.3 Check front/rear axle wheel bearing play					○	○	
6.4 Check front/rear ball joints for play					○	○	
6.5 Check front/rear track rods for play					○	○	

7.0 - Remove wheels - Ref. AA-RM-03B03-01-001	Completed	Not Completed	Comments
7.1 Check brake pads (replace if necessary)	○	○	
7.2 Check condition of brake discs (weigh all of them if CCM) - Ref. AA-RM-03C01-01-006	○	○	
7.3 Check EPB (Electronic Parking Brake) pads (replace if required)	○	○	
7.4 Check brake system for routing, leaks, and damage (bleed brakes if required)	○	○	
7.5 Check/clean air ducts of brake system	○	○	
8.0 - Remove all under floors - Ref. AA-RM-02A04-04-001/002/003/005/006/008	**Completed**	**Not Completed**	**Comments**
8.1 Check all visible parts for routing, leaks, and damage (cooling system)	○	○	
8.2 Check powertrain system for leaks (engine, transmission, and exhaust)	○	○	
8.3 Check all visible steering components for leaks and damage	○	○	
8.4 Check engine mounts	○	○	
8.5 Tighten screws, nuts, and bolts (including exhaust system, clips and strips in general)	○	○	
8.6 Check torques on suspension - Ref. AA-RM-03B01-02-002/003, 03B02-01-001/002	○	○	
8.7 Check condition of drive shafts	○	○	
9.0 - Remove rear wheel arch liners (carry out steps 9.2 to 9.5 while oil is draining)	**Completed**	**Not Completed**	**Comments**
9.1 Drain engine oil - Ref. AA-RM-04F02-01-011	○	○	
9.2 Check Z-bar drop links for play	○	○	
9.3 Check/clean air filter elements (replace as required) - Ref. AA-RM-04F01-02-002	○	○	
9.4 Check transmission and clutch fluids are not overfilled	○	○	
9.5 Check radiator/low temp cooler condition, check for any damage (clean as necessary)	○	○	
10.0 - Lower vehicle	**Completed**	**Not Completed**	**Comments**
10.1 Replace engine oil filter - Ref. AA-RM-04F02-01-003	○	○	
10.2 Fill engine oil (5 litres to start) - Ref. AA-RM-04F02-01-011	○	○	
10.3 Check engine oil level - Ref. AA-RM-04F02-01-007	○	○	
10.4 Top up and recheck level as required	○	○	
11.0 - Lift vehicle	**Completed**	**Not Completed**	**Comments**
11.1 Visual inspection for general leaks	○	○	

Underside of vehicle

12.0 - Install all under floors - Ref. AA-RM-02A04-04-001/002/003/005/006/008	Completed	Not Completed	Comments
12.1 Check tyre orientation, damage, and crack formations	○	○	
12.2 Install wheels - Ref. AA-RM-03B03-01-001	○	○	
13.0 - Lower vehicle to ground	**Completed**	**Not Completed**	**Comments**
13.1 Check wheel bolt torque values (130 Nm)	○	○	
13.2 Replace engine ISG (Intake Sound Generator) - Ref. AA-RM-04F01-01-037	○	○	
13.3 Check corrosion/antifreeze protection and enter here: °C	○	○	
13.4 Check exhaust emission label (market specific)	○	○	
13.5 Check injection/ignition system connections and harness	○	○	
13.6 Check/adjust fluid level of cooling system	○	○	
13.7 Check vehicle steering alignment (adjust as required)	○	○	
14.0 - Road test (carry out 14.1 and 14.2 whilst on test. Max 30 min / 6 miles)	**Completed**	**Not Completed**	**Comments**
14.1 Check airbrake function	○	○	
14.2 Check navigation system (if fitted)	○	○	
15.0 - Finish road test and carry out documents/safety device/final checks	**Completed**	**Not Completed**	**Comments**
15.1 Replace key fob battery and clean contacts with Electrolube CCS	○	○	
15.2 Check function of all keys, locks, and fobs	○	○	
15.3 Check for towing eye	○	○	
15.4 Read out fault memory, clear errors, and zero service interval counter via MDS	○	○	
15.5 Report and rectify all recorded defects	○	○	
15.6 Check/stamp service and warranty guide	○	○	

Associated Documents

Step Reference	Document Number	Document Title
2.3	AA-RM-02A02-04-003	Adjust headlamp
2.10 and 2.11	AA-RM-02A02-03-004	Remove/install luggage bin - Rear
2.13	AA-RM-03D01-01-008	Fill/bleed fluid - Steering system
6.0	AA-RM-02A04-04-007	Secure/lift vehicle on lifting platform
7.0 and 12.2	AA-RM-03B03-01-001	Remove/install Wheel
7.2	AA-RM-03C01-01-006	Cleaning/checking CCM brake discs
8.0 and 12.0	AA-RM-02A04-04-001	Remove/install floor panel - Engine/fuel tank
8.0 and 12.0	AA-RM-02A04-04-002	Remove/install floor panel - Front
8.0 and 12.0	AA-RM-02A04-04-003	Remove/install floor panel - Tunnel
8.0 and 12.0	AA-RM-02A04-04-005	Remove/install floor panel - Rear lower extension
8.0 and 12.0	AA-RM-02A04-04-006	Remove/install guide vane
8.0 and 12.0	AA-RM-02A04-04-008	Remove/install transmission floor panel
8.6	AA-RM-03B01-02-002	Remove/install lower wishbone - front
8.6	AA-RM-03B01-02-003	Remove/install upper wishbone - front
8.6	AA-RM-03B02-01-001	Remove/install upper wishbone - rear
8.6	AA-RM-03B02-01-002	Remove/install lower wishbone - rear
9.1 and 10.2	AA-RM-04F02-01-011	Drain and refill engine oil
9.3	AA-RM-04F01-02-002	Remove/install air filter
10.1	AA-RM-04F02-01-003	Remove/install Oil Filter
10.3	AA-RM-04F02-01-007	Check engine oil level
13.2	AA-RM-04F01-01-037	Remove/install intake sound generator

Consumables / Sundries	
Comments	
Technician Name: **Technician Signature:**	**Dealer Stamp:**

Printed copy is not controlled

Service sheet : 8th year or 120,000 km (80,000 miles)

Please check vehicle odometer reading against mileage dependant task service sheet before carrying out service

Customer:		**km / miles:**
Vehicle registration :	**VIN:**	**Date:**
Colour:		**Service Time: 6.8 units**
Address :		**Invoice / Job no:**

Vehicle acceptance (customer present from 1.1 to 1.4)

1.0 - Vehicle pre-checks	**Completed**	**Not Completed**	**Comments**
1.1 Check for wheel locking key (if supplied)	○	○	
1.2 Check tyre orientation, damage, and crack formations	○	○	
1.3 Inspect wheel rim condition	○	○	
1.4 Check bodywork	○	○	
1.5 Check McLaren Retailer Portal for any outstanding campaigns on vehicle	○	○	

Check paint and panels for defects - please mark the picture as following: (D dent - S scratch - X damage)

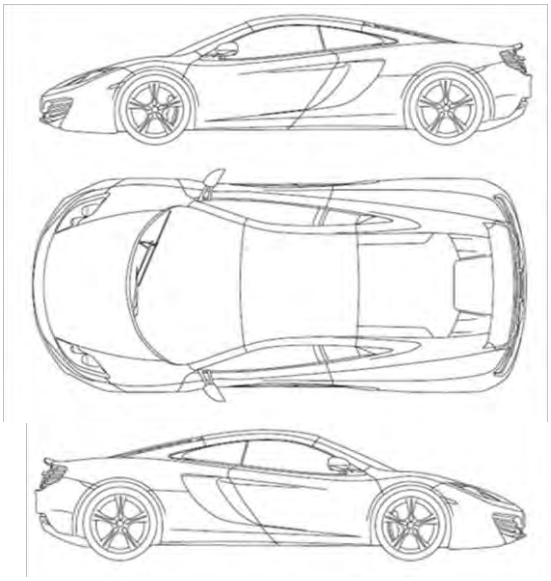

Vehicle exterior/fluid and battery checks - (ensure battery charger and body protection are fitted)

2.0 - Two technicians will be required for steps 2.1 and 2.2	**Completed**	**Not Completed**	**Comments**
2.1 Check exterior lighting function	○	○	
2.2 Check headlamp/windscreen washer system	○	○	
2.3 Check headlamp adjustment - Ref. AA-RM-02A02-04-003	○	○	
2.4 Replace wiper blade	○	○	
2.5 Check window glazing	○	○	
2.6 Check exterior light glazing	○	○	
2.7 Check gaps and seals of doors, engine cover, and luggage compartment lid	○	○	
2.8 Check fuel filler flap manual opening	○	○	

	Completed	Not Completed	Comments
2.9 Check controls and adjusters in general (hinges, doors, luggage lid and engine cover)	○	○	
2.10 Check battery connections and charge (physical check) - Ref. AA-RM-02A02-03-004	○	○	
2.11 Replace cabin filter - Ref. AA-RM-02A02-03-004	○	○	
2.12 Bleed brake fluid system as required (while servicing) - Ref. AA-RM-03C01-01-005	○	○	
2.13 Check/adjust fluid level of power steering - Ref. AA-RM-03D01-01-008	○	○	
2.14 Check/adjust fluid level of windshield washer system	○	○	

Interior function checks

3.0 - Carry out cluster checks	Completed	Not Completed	Comments
3.1 Check battery condition	○	○	
3.2 Check engine oil level - Ref. AA-RM-04F02-01-007	○	○	
3.3 Check TPMS (Tyre Pressure Monitoring System)	○	○	
3.4 Check indicator lamps and warning lamps	○	○	
4.0 - Carry out IRIS checks	**Completed**	**Not Completed**	**Comments**
4.1 Check operation of IRIS system (audio/phone/sat nav/pc/cameras)	○	○	
5.0 - Carry out interior functional checks	**Completed**	**Not Completed**	**Comments**
5.1 Check central locking and alarm system	○	○	
5.2 Check interior controls (switches, lights, windows) and parking sensors (if fitted)	○	○	
5.3 Check heated rear window function	○	○	
5.4 Check operation of heating, ventilation and air conditioning system	○	○	
5.5 Check condition of interior trim (seats, door casings, centre console, facia, carpets)	○	○	
5.6 Check exterior door mirrors function and powerfold, rear view mirror, and sun visors	○	○	
5.7 Check condition and operation of seat belts/buckles (ensure belts are not twisted)	○	○	
5.8 Check brake pedal free play	○	○	
5.9 Check operation of EPB (Electronic Parking Brake)	○	○	

Mechanical checks

6.0 - Secure/lift vehicle on lifting platform - Ref. AA-RM-02A04-04-005					Completed	Not Completed	Comments
6.1 Check/enter tyre pressure	FL:	FR:	RL:	RR:	○	○	
6.2 Measure tread depth (mm)	FL:	FR:	RL:	RR:	○	○	
Outside							
Center							
Inside							
6.3 Check front/rear axle wheel bearing play					○	○	
6.4 Check front/rear ball joints for play					○	○	
6.5 Check front/rear track rods for play					○	○	

7.0 - Remove wheels - Ref. AA-RM-03B03-01-001	Completed	Not Completed	Comments
7.1 Check brake pads (replace if necessary)	○	○	
7.2 Check condition of brake discs (weigh all of them if CCM) - Ref. AA-RM-03C01-01-006	○	○	
7.3 Replace electronic parking brake pads (every 2 years) - Ref. AA-RM-03C02-01-001	○	○	
7.4 Check brake system for leaks/damage (bleed as required) - Ref. AA-RM-03C01-01-005	○	○	
7.5 Check/clean air ducts of brake system	○	○	
8.0 - Remove all under floors - Ref. AA-RM-02A04-04-001/002/003/005/006/008	**Completed**	**Not Completed**	**Comments**
8.1 Check all visible parts for routing, leaks, and damage (cooling system)	○	○	
8.2 Check powertrain system for leaks (engine, transmission, and exhaust)	○	○	
8.3 Check all visible steering components for leaks and damage	○	○	
8.4 Check engine mounts	○	○	
8.5 Tighten screws, nuts, and bolts (including exhaust system, clips and strips in general)	○	○	
8.6 Check torques on suspension - Ref. AA-RM-03B01-02-002/003, 03B02-01-001/002	○	○	
8.7 Check condition of drive shafts	○	○	
9.0 - Remove rear wheel arch liners (carry out steps 9.2 to 9.7 while oil is draining)	**Completed**	**Not Completed**	**Comments**
Replace clutch oil and filter (Every 30,000km or 20,000 miles only)			
Replace transmission oil and clean filter (Every 60,000 km or 40,000 miles only)			
9.1 Drain engine oil - Ref. AA-RM-04F02-01-011	○	○	
9.2 Check Z-bar drop links for play	○	○	
9.3 Replace air filter - Ref. AA-RM-04F01-02-002	○	○	
9.4 Check radiator/low temp cooler condition, check for any damage (clean as necessary)	○	○	
9.5 Check transmission and clutch fluids (when mileage is not achieved) are not overfilled	○	○	
9.6 Replace clutch oil and filter (only if mileage achieved) - Ref. AA-RM-04G01-01-015/021	○	○	
9.7 Replace transmission oil / clean filter (only if mileage achieved) - Ref. AA-RM-04G01-01-014/016	○	○	
9.8 Visually check condensor area for debris	○	○	
10.0 - Lower vehicle	**Completed**	**Not Completed**	**Comments**
10.1 Replace engine oil filter - Ref. AA-RM-04F02-01-003	○	○	
10.2 Fill engine oil (5 litres to start) - Ref. AA-RM-04F02-01-011	○	○	
10.3 Check engine oil level - Ref. AA-RM-04F02-01-007	○	○	
10.4 Top up and re-check level as required	○	○	
11.0 - Lift vehicle	**Completed**	**Not Completed**	**Comments**
11.1 Visual inspection for general leaks	○	○	

Underside of vehicle

12.0 - Install all under floors - Ref. AA-RM-02A04-04-001/002/003/005/006/008	Completed	Not Completed	Comments
12.1 Check tyre orientation, damage, and crack formations	○	○	
12.2 Replace wheel nut bolts	○	○	
12.3 Install wheels - Ref. AA-RM-03B03-01-001	○	○	
13.0 - Lower vehicle to ground	**Completed**	**Not Completed**	**Comments**
13.1 Check wheel bolt torque values (130 Nm)	○	○	
13.2 Replace engine ISG (Intake Sound Generator) - Ref. AA-RM-04F01-01-037	○	○	
13.3 Check corrosion/antifreeze protection and enter here: °C	○	○	
13.4 Check exhaust emission label (market specific)	○	○	
13.5 Check injection/ignition system connections and harness	○	○	
13.6 Check/adjust fluid level of cooling system	○	○	
13.7 Check vehicle steering alignment (adjust as required)	○	○	
14.0 - Road test (carry out 14.1 and 14.2 whilst on test. Max 30 min / 6 miles)	**Completed**	**Not Completed**	**Comments**
14.1 Check airbrake function	○	○	
14.2 Check navigation system (if fitted)	○	○	
15.0 - Finish road test and carry out documents/safety device/final checks	**Completed**	**Not Completed**	**Comments**
15.1 Replace key fob battery and clean contacts with Electrolube CCS	○	○	
15.2 Check function of all keys, locks, and fobs	○	○	
15.3 Check for towing eye	○	○	
15.4 Read out fault memory, clear errors, and zero service interval counter via MDS	○	○	
15.5 Report and rectify all recorded defects	○	○	
15.6 Check/stamp service and warranty guide	○	○	

Associated Documents

Step Reference	Document Number	Document Title
2.10 and 2.11	AA-RM-02A02-03-004	Remove/install luggage bin - Rear
2.12 and 7.4	AA-RM-03C01-01-005	Fill/bleed fluid - Brake system
2.13	AA-RM-03D01-01-008	Fill/bleed fluid - Steering system
6.0	AA-RM-02A04-04-007	Secure/lift vehicle on lifting platform
7.0 and 12.3	AA-RM-03B03-01-001	Remove/install Wheel
7.2	AA-RM-03C01-01-006	Cleaning/checking CCM brake discs
7.3	AA-RM-03C02-01-001	Remove/install pads - parking brake
8.0 and 12.0	AA-RM-02A04-04-001	Remove/install floor panel - Engine/fuel tank
8.0 and 12.0	AA-RM-02A04-04-002	Remove/install floor panel - Front
8.0 and 12.0	AA-RM-02A04-04-003	Remove/install floor panel - Tunnel
8.0 and 12.0	AA-RM-02A04-04-005	Remove/install floor panel - Rear lower extension
8.0 and 12.0	AA-RM-02A04-04-006	Remove/install guide vane
8.0 and 12.0	AA-RM-02A04-04-008	Remove/install transmission floor panel
8.6	AA-RM-03B01-02-002	Remove/install lower wishbone - front
8.6	AA-RM-03B01-02-003	Remove/install upper wishbone - front
8.6	AA-RM-03B02-01-001	Remove/install upper wishbone - rear
8.6	AA-RM-03B02-01-002	Remove/install lower wishbone - rear
9.1 and 10.2	AA-RM-04F02-01-011	Drain and refill engine oil
9.3	AA-RM-04F01-02-002	Remove/install air filter
9.6	AA-RM-04G01-01-015	Drain and refill - Clutch fluid
9.6	AA-RM-04G01-01-017	Remove/install filter - Clutch fluid
9.7	AA-RM-04G01-01-014	Drain and refill - Transmission Fluid
9.7	AA-RM-04G01-01-016	Remove/install filter - Transmission fluid
10.1	AA-RM-04F02-01-003	Remove/install Oil Filter
10.3	AA-RM-04F02-01-007	Check engine oil level
13.2	AA-RM-04F01-01-037	Remove/install intake sound generator

Consumables / Sundries	
Comments	
Technician Name: **Technician Signature:**	**Dealer Stamp:**

Printed copy is not controlled

Service sheet : 9th year or 135,000 km (90,000 miles)

Please check vehicle odometer reading against mileage dependant task service sheet before carrying out service

Customer:		**km / miles:**
Vehicle registration :	**VIN:**	**Date:**
Colour:		**Service Time: 6.55 units**
Address :		**Invoice / Job no:**

Vehicle acceptance (customer present from 1.1 to 1.4)

1.0 - Vehicle pre-checks	**Completed**	**Not Completed**	**Comments**
1.1 Check for wheel locking key (if supplied)	○	○	
1.2 Check tyre orientation, damage, and crack formations	○	○	
1.3 Inspect wheel rim condition	○	○	
1.4 Check bodywork	○	○	
1.5 Check McLaren Retailer Portal for any outstanding campaigns on vehicle	○	○	

Check paint and panels for defects - please mark the picture as following: (D dent - S scratch - X damage)

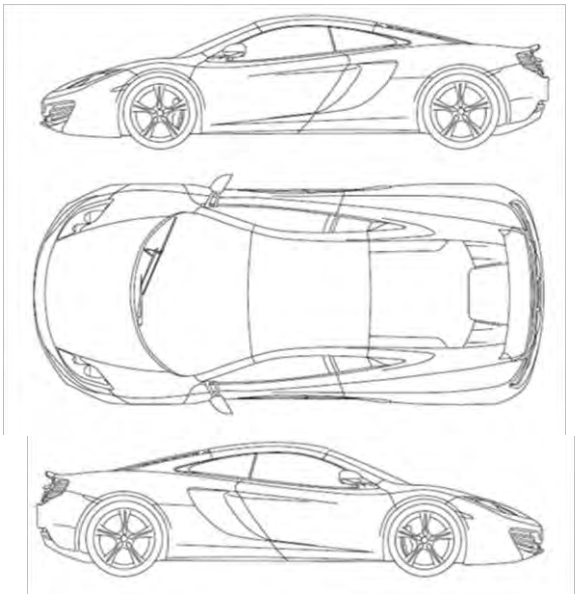

Vehicle exterior/fluid and battery checks - (ensure battery charger and body protection are fitted)

2.0 - Two technicians will be required for steps 2.1 and 2.2	**Completed**	**Not Completed**	**Comments**
2.1 Check exterior lighting function	○	○	
2.2 Check headlamp/windscreen washer system	○	○	
2.3 Check headlamp adjustment - Ref. AA-RM-02A02-04-003	○	○	
2.4 Replace wiper blade	○	○	
2.5 Check window glazing	○	○	
2.6 Check exterior light glazing	○	○	
2.7 Check gaps and seals of doors, engine cover, and luggage compartment lid	○	○	
2.8 Check fuel filler flap manual opening	○	○	

	Completed	Not Completed	Comments
2.9 Check controls and adjusters in general (hinges, doors, luggage lid and engine cover)	○	○	
2.10 Check battery connections and charge (physical check) - Ref. AA-RM-02A02-03-004	○	○	
2.11 Check cabin filter (replace as required) - Ref. AA-RM-02A02-03-004	○	○	
2.12 Check/adjust fluid level of brake system	○	○	
2.13 Check/adjust fluid level of power steering - Ref. AA-RM-03D01-01-008	○	○	
2.14 Check/adjust fluid level of windshield washer system	○	○	

Interior function checks

3.0 - Carry out cluster checks	**Completed**	**Not Completed**	**Comments**
3.1 Check battery condition	○	○	
3.2 Check engine oil level - Ref. AA-RM-04F02-01-007	○	○	
3.3 Check TPMS (Tyre Pressure Monitoring System)	○	○	
3.4 Check indicator lamps and warning lamps	○	○	
4.0 - Carry out IRIS checks	**Completed**	**Not Completed**	**Comments**
4.1 Check operation of IRIS system (audio/phone/sat nav/pc/cameras)	○	○	
5.0 - Carry out interior functional checks	**Completed**	**Not Completed**	**Comments**
5.1 Check central locking and alarm system	○	○	
5.2 Check interior controls (switches, lights, windows) and parking sensors (if fitted)	○	○	
5.3 Check heated rear window function	○	○	
5.4 Check operation of heating, ventilation and air conditioning system	○	○	
5.5 Check condition of interior trim (seats, door casings, centre console, facia, carpets)	○	○	
5.6 Check exterior door mirrors function and powerfold, rear view mirror, and sun visors	○	○	
5.7 Check condition and operation of seat belts/buckles (ensure belts are not twisted)	○	○	
5.8 Check brake pedal free play	○	○	
5.9 Check operation of EPB (Electronic Parking Brake)	○	○	

Mechanical checks

6.0 - Secure/lift vehicle on lifting platform - Ref. AA-RM-02A04-04-005					**Completed**	**Not Completed**	**Comments**
6.1 Check/enter tyre pressure	FL:	FR:	RL:	RR:	○	○	
6.2 Measure tread depth (mm)	FL:	FR:	RL:	RR:	○	○	
Outside							
Center							
Inside							
6.3 Check front/rear axle wheel bearing play					○	○	
6.4 Check front/rear ball joints for play					○	○	
6.5 Check front/rear track rods for play					○	○	

7.0 - Remove wheels - Ref. AA-RM-03B03-01-001	Completed	Not Completed	Comments
7.1 Check brake pads (replace if necessary)	○	○	
7.2 Check condition of brake discs (weigh all of them if CCM) - Ref. AA-RM-03C01-01-006	○	○	
7.3 Check EPB (Electronic Parking Brake) pads (replace if required)	○	○	
7.4 Check brake system for leaks/damage (bleed as required) - Ref. AA-RM-03C01-01-005	○	○	
7.5 Check/clean air ducts of brake system	○	○	
8.0 - Remove all under floors - Ref. AA-RM-02A04-04-001/002/003/005/006/008	**Completed**	**Not Completed**	**Comments**
8.1 Check all visible parts for routing, leaks, and damage (cooling system)	○	○	
8.2 Check powertrain system for leaks (engine, transmission, and exhaust)	○	○	
8.3 Check all visible steering components for leaks and damage	○	○	
8.4 Check engine mounts	○	○	
8.5 Tighten screws, nuts, and bolts (including exhaust system, clips and strips in general)	○	○	
8.6 Check torques on suspension - Ref. AA-RM-03B01-02-002/003, 03B02-01-001/002	○	○	
8.7 Check condition of drive shafts	○	○	
9.0 - Remove rear wheel arch liners (carry out steps 9.2 to 9.6 while oil is draining)	**Completed**	**Not Completed**	**Comments**
Replace cooling system fluid			
9.1 Drain engine oil - Ref. AA-RM-04F02-01-011	○	○	
9.2 Check Z-bar drop links for play	○	○	
9.3 Check/clean air filter elements (replace as required) - Ref. AA-RM-04F01-02-002	○	○	
9.4 Check transmission and clutch fluids are not overfilled	○	○	
9.5 Check radiator/low temp cooler condition, check for any damage (clean as necessary)	○	○	
9.6 Replace cooling system fluid - Ref. AA-RM-03L01-01-005	○	○	
10.0 - Lower vehicle	**Completed**	**Not Completed**	**Comments**
10.1 Replace engine oil filter - Ref. AA-RM-04F02-01-003	○	○	
10.2 Fill engine oil (5 litres to start) - Ref. AA-RM-04F02-01-011	○	○	
10.3 Check engine oil level - Ref. AA-RM-04F02-01-007	○	○	
10.4 Top up and recheck level as required	○	○	
11.0 - Lift vehicle	**Completed**	**Not Completed**	**Comments**
11.1 Visual inspection for general leaks	○	○	

Underside of vehicle

12.0 - Install all under floors - Ref. AA-RM-02A04-04-001/002/003/005/006/008	Completed	Not Completed	Comments
12.1 Check tyre orientation, damage, and crack formations	○	○	
12.2 Install wheels - Ref. AA-RM-03B03-01-001	○	○	
13.0 - Lower vehicle to ground	**Completed**	**Not Completed**	**Comments**
13.1 Check wheel bolt torque values (130 Nm)	○	○	
13.2 Replace engine ISG (Intake Sound Generator) - Ref. AA-RM-04F01-01-037	○	○	
13.3 Check corrosion/antifreeze protection and enter here: °C	○	○	
13.4 Check exhaust emission label (market specific)	○	○	
13.5 Check injection/ignition system connections and harness	○	○	
13.6 Check vehicle steering alignment (adjust as required)	○	○	
14.0 - Road test (carry out 14.1 and 14.2 whilst on test. Max 30 min / 6 miles)	**Completed**	**Not Completed**	**Comments**
14.1 Check airbrake function	○	○	
14.2 Check navigation system (if fitted)	○	○	
15.0 - Finish road test and carry out documents/safety device/final checks	**Completed**	**Not Completed**	**Comments**
15.1 Replace key fob battery and clean contacts with Electrolube CCS	○	○	
15.2 Check function of all keys, locks, and fobs	○	○	
15.3 Check for towing eye	○	○	
15.4 Check expiry dates of fire extinguisher/tyre inflation kit (if fitted)	○	○	
15.5 Read out fault memory, clear errors, and zero service interval counter via MDS	○	○	
15.6 Report and rectify all recorded defects	○	○	
15.7 Check/stamp service and warranty guide	○	○	

Associated Documents

Step Reference	Document Number	Document Title
2.3	AA-RM-02A02-04-003	Adjust headlamp
2.10 and 2.11	AA-RM-02A02-03-004	Remove/install luggage bin - Rear
2.13	AA-RM-03D01-01-008	Fill/bleed fluid - Steering system
6.0	AA-RM-02A04-04-007	Secure/lift vehicle on lifting platform
7.0 and 12.2	AA-RM-03B03-01-001	Remove/install Wheel
7.2	AA-RM-03C01-01-006	Cleaning/checking CCM brake discs
8.0 and 12.0	AA-RM-02A04-04-001	Remove/install floor panel - Engine/fuel tank
8.0 and 12.0	AA-RM-02A04-04-002	Remove/install floor panel - Front
8.0 and 12.0	AA-RM-02A04-04-003	Remove/install floor panel - Tunnel
8.0 and 12.0	AA-RM-02A04-04-005	Remove/install floor panel - Rear lower extension
8.0 and 12.0	AA-RM-02A04-04-006	Remove/install guide vane
8.0 and 12.0	AA-RM-02A04-04-008	Remove/install transmission floor panel
8.6	AA-RM-03B01-02-002	Remove/install lower wishbone - front
8.6	AA-RM-03B01-02-003	Remove/install upper wishbone - front
8.6	AA-RM-03B02-01-001	Remove/install upper wishbone - rear
8.6	AA-RM-03B02-01-002	Remove/install lower wishbone - rear
9.1 and 10.2	AA-RM-04F02-01-011	Drain and refill engine oil
9.3	AA-RM-04F01-02-002	Remove/install air filter
9.6	AA-RM-03L01-01-005	Drain and refill cooling system
10.1	AA-RM-04F02-01-003	Remove/install Oil Filter
10.3	AA-RM-04F02-01-007	Check engine oil level
13.2	AA-RM-04F01-01-037	Remove/install intake sound generator

Consumables / Sundries	
Comments	
Technician Name: **Technician Signature:**	**Dealer Stamp:**

Printed copy is not controlled

Service sheet : 10th year or 150,000 km (100,000 miles)

Please check vehicle odometer reading against mileage dependant task service sheet before carrying out service

Customer:		**km / miles:**
Vehicle registration :	**VIN:**	**Date:**
Colour:		**Service Time: 6.8 units**
Address :		**Invoice / Job no:**

Vehicle acceptance (customer present from 1.1 to 1.4)

1.0 - Vehicle pre-checks	**Completed**	**Not Completed**	**Comments**
1.1 Check for wheel locking key (if supplied)	○	○	
1.2 Check tyre orientation, damage, and crack formations	○	○	
1.3 Inspect wheel rim condition	○	○	
1.4 Check bodywork	○	○	
1.5 Check McLaren Retailer Portal for any outstanding campaigns on vehicle	○	○	

Check paint and panels for defects - please mark the picture as following: (D dent - S scratch - X damage)

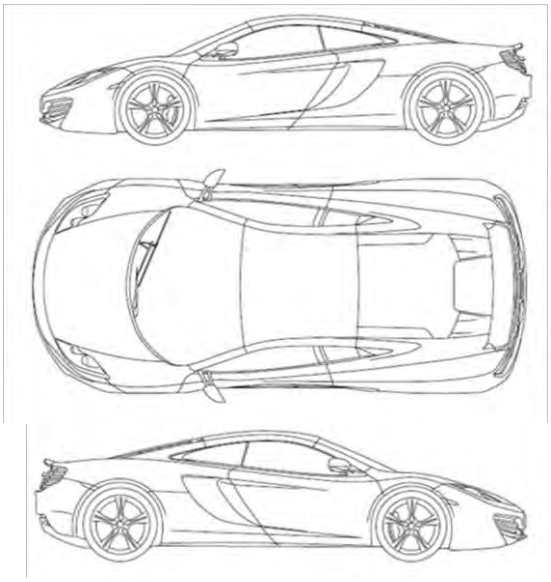

Vehicle exterior/fluid and battery checks - (ensure battery charger and body protection are fitted)

2.0 - Two technicians will be required for steps 2.1 and 2.2	**Completed**	**Not Completed**	**Comments**
2.1 Check exterior lighting function	○	○	
2.2 Check headlamp/windscreen washer system	○	○	
2.3 Check headlamp adjustment - Ref. AA-RM-02A02-04-003	○	○	
2.4 Replace wiper blade	○	○	
2.5 Check window glazing	○	○	
2.6 Check exterior light glazing	○	○	
2.7 Check gaps and seals of doors, engine cover, and luggage compartment lid	○	○	
2.8 Check fuel filler flap manual opening	○	○	

	Completed	Not Completed	Comments
2.9 Check controls and adjusters in general (hinges, doors, luggage lid and engine cover)	○	○	
2.10 Check battery connections and charge (physical check) - Ref. AA-RM-02A02-03-004	○	○	
2.11 Replace cabin filter - Ref. AA-RM-02A02-03-004	○	○	
2.12 Bleed brake fluid system as required (while servicing) - Ref. AA-RM-03C01-01-005	○	○	
2.13 Check/adjust fluid level of power steering - Ref. AA-RM-03D01-01-008	○	○	
2.14 Check/adjust fluid level of windshield washer system	○	○	

Interior function checks

3.0 - Carry out cluster checks	Completed	Not Completed	Comments
3.1 Check battery condition	○	○	
3.2 Check engine oil level - Ref. AA-RM-04F02-01-007	○	○	
3.3 Check TPMS (Tyre Pressure Monitoring System)	○	○	
3.4 Check indicator lamps and warning lamps	○	○	
4.0 - Carry out IRIS checks	**Completed**	**Not Completed**	**Comments**
4.1 Check operation of IRIS system (audio/phone/sat nav/pc/cameras)	○	○	
5.0 - Carry out interior functional checks	**Completed**	**Not Completed**	**Comments**
5.1 Check central locking and alarm system	○	○	
5.2 Check interior controls (switches, lights, windows) and parking sensors (if fitted)	○	○	
5.3 Check heated rear window function	○	○	
5.4 Check operation of heating, ventilation and air conditioning system	○	○	
5.5 Check condition of interior trim (seats, door casings, centre console, facia, carpets)	○	○	
5.6 Check exterior door mirrors function and powerfold, rear view mirror, and sun visors	○	○	
5.7 Check condition and operation of seat belts/buckles (ensure belts are not twisted)	○	○	
5.8 Check brake pedal free play	○	○	
5.9 Check operation of EPB (Electronic Parking Brake)	○	○	

Mechanical checks

6.0 - Secure/lift vehicle on lifting platform - Ref. AA-RM-02A04-04-005					Completed	Not Completed	Comments
6.1 Check/enter tyre pressure	FL:	FR:	RL:	RR:	○	○	
6.2 Measure tread depth (mm)	FL:	FR:	RL:	RR:	○	○	
Outside							
Center							
Inside							
6.3 Check front/rear axle wheel bearing play					○	○	
6.4 Check front/rear ball joints for play					○	○	
6.5 Check front/rear track rods for play					○	○	

7.0 - Remove wheels - Ref. AA-RM-03B03-01-001	Completed	Not Completed	Comments
7.1 Check brake pads (replace if necessary)	○	○	
7.2 Check condition of brake discs (weigh all of them if CCM) - Ref. AA-RM-03C01-01-006	○	○	
7.3 Replace electronic parking brake pads (every 2 years) - Ref. AA-RM-03C02-01-001	○	○	
7.4 Check brake system for leaks/damage (bleed as required) - Ref. AA-RM-03C01-01-005	○	○	
7.5 Check/clean air ducts of brake system	○	○	
8.0 - Remove all under floors - Ref. AA-RM-02A04-04-001/002/003/005/006/008	**Completed**	**Not Completed**	**Comments**
8.1 Check all visible parts for routing, leaks, and damage (cooling system)	○	○	
8.2 Check powertrain system for leaks (engine, transmission, and exhaust)	○	○	
8.3 Check all visible steering components for leaks and damage	○	○	
8.4 Check engine mounts	○	○	
8.5 Tighten screws, nuts, and bolts (including exhaust system, clips and strips in general)	○	○	
8.6 Check torques on suspension - Ref. AA-RM-03B01-02-002/003, 03B02-01-001/002	○	○	
8.7 Check condition of drive shafts	○	○	
9.0 - Remove rear wheel arch liners (carry out steps 9.2 to 9.6 while oil is draining)	**Completed**	**Not Completed**	**Comments**
Replace clutch oil and filter (Every 30,000km or 20,000 miles only)			
9.1 Drain engine oil - Ref. AA-RM-04F02-01-011	○	○	
9.2 Check Z-bar drop links for play	○	○	
9.3 Replace air filter - Ref. AA-RM-04F01-02-002	○	○	
9.4 Check radiator/low temp cooler condition, check for any damage (clean as necessary)	○	○	
9.5 Check transmission and clutch fluids (when mileage is not achieved) are not overfilled	○	○	
9.6 Replace clutch oil and filter (only if mileage achieved) - Ref. AA-RM-04G01-01-015/021	○	○	
9.7 Visually check condensor area for debris	○	○	
10.0 - Lower vehicle	**Completed**	**Not Completed**	**Comments**
10.1 Replace engine oil filter - Ref. AA-RM-04F02-01-003	○	○	
10.2 Fill engine oil (5 litres to start) - Ref. AA-RM-04F02-01-011	○	○	
10.3 Check engine oil level - Ref. AA-RM-04F02-01-007	○	○	
10.4 Top up and re-check level as required	○	○	
11.0 - Lift vehicle	**Completed**	**Not Completed**	**Comments**
11.1 Visual inspection for general leaks	○	○	

Underside of vehicle

12.0 - Install all under floors - Ref. AA-RM-02A04-04-001/002/003/005/006/008	Completed	Not Completed	Comments
12.1 Check tyre orientation, damage, and crack formations	○	○	
12.2 Replace wheel nut bolts	○	○	
12.3 Install wheels - Ref. AA-RM-03B03-01-001	○	○	
13.0 - Lower vehicle to ground	**Completed**	**Not Completed**	**Comments**
13.1 Check wheel bolt torque values (130 Nm)	○	○	
13.2 Replace engine ISG (Intake Sound Generator) - Ref. AA-RM-04F01-01-037	○	○	
13.3 Check corrosion/antifreeze protection and enter here: °C	○	○	
13.4 Check exhaust emission label (market specific)	○	○	
13.5 Check injection/ignition system connections and harness	○	○	
13.6 Check/adjust fluid level of cooling system	○	○	
13.7 Check vehicle steering alignment (adjust as required)	○	○	
14.0 - Road test (carry out 14.1 and 14.2 whilst on test. Max 30 min / 6 miles)	**Completed**	**Not Completed**	**Comments**
14.1 Check airbrake function	○	○	
14.2 Check navigation system (if fitted)	○	○	
15.0 - Finish road test and carry out documents/safety device/final checks	**Completed**	**Not Completed**	**Comments**
15.1 Replace key fob battery and clean contacts with Electrolube CCS	○	○	
15.2 Check function of all keys, locks, and fobs	○	○	
15.3 Check for towing eye	○	○	
15.4 Read out fault memory, clear errors, and zero service interval counter via MDS	○	○	
15.5 Report and rectify all recorded defects	○	○	
15.6 Check/stamp service and warranty guide	○	○	

Associated Documents

Step Reference	Document Number	Document Title
2.10 and 2.11	AA-RM-02A02-03-004	Remove/install luggage bin - Rear
2.12 and 7.4	AA-RM-03C01-01-005	Fill/bleed fluid - Brake system
2.13	AA-RM-03D01-01-008	Fill/bleed fluid - Steering system
6.0	AA-RM-02A04-04-007	Secure/lift vehicle on lifting platform
7.0 and 12.3	AA-RM-03B03-01-001	Remove/install Wheel
7.2	AA-RM-03C01-01-006	Cleaning/checking CCM brake discs
7.3	AA-RM-03C02-01-001	Remove/install pads - parking brake
8.0 and 12.0	AA-RM-02A04-04-001	Remove/install floor panel - Engine/fuel tank
8.0 and 12.0	AA-RM-02A04-04-002	Remove/install floor panel - Front
8.0 and 12.0	AA-RM-02A04-04-003	Remove/install floor panel - Tunnel
8.0 and 12.0	AA-RM-02A04-04-005	Remove/install floor panel - Rear lower extension
8.0 and 12.0	AA-RM-02A04-04-006	Remove/install guide vane
8.0 and 12.0	AA-RM-02A04-04-008	Remove/install transmission floor panel
8.6	AA-RM-03B01-02-002	Remove/install lower wishbone - front
8.6	AA-RM-03B01-02-003	Remove/install upper wishbone - front
8.6	AA-RM-03B02-01-001	Remove/install upper wishbone - rear
8.6	AA-RM-03B02-01-002	Remove/install lower wishbone - rear
9.1 and 10.2	AA-RM-04F02-01-011	Drain and refill engine oil
9.3	AA-RM-04F01-02-002	Remove/install air filter
9.7	AA-RM-04G01-01-015	Remove/install fluid - Transmission / Clutch
9.7	AA-RM-04G01-01-017	Remove/install filter - Transmission / Clutch fluid
10.1	AA-RM-04F02-01-003	Remove/install Oil Filter
10.3	AA-RM-04F02-01-007	Check engine oil level
13.2	AA-RM-04F01-01-037	Remove/install intake sound generator

Consumables / Sundries	
Comments	
Technician Name: **Technician Signature:**	**Dealer Stamp:**

Printed copy is not controlled

Service sheet : 11th year or 165,000 km (110,000 miles)

Please check vehicle odometer reading against mileage dependant task service sheet before carrying out service

Customer:		**km / miles:**
Vehicle registration :	**VIN:**	**Date:**
Colour:		**Service Time: 5.85 units**
Address :		**Invoice / Job no:**

Vehicle acceptance (customer present from 1.1 to 1.4)

1.0 - Vehicle pre-checks	**Completed**	**Not Completed**	**Comments**
1.1 Check for wheel locking key (if supplied)	○	○	
1.2 Check tyre orientation, damage, and crack formations	○	○	
1.3 Inspect wheel rim condition	○	○	
1.4 Check bodywork	○	○	
1.5 Check McLaren Retailer Portal for any outstanding campaigns on vehicle	○	○	

Check paint and panels for defects - please mark the picture as following: (D dent - S scratch - X damage)

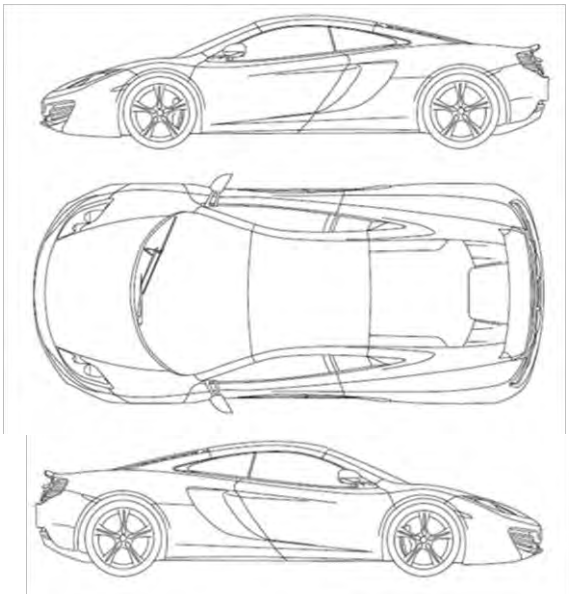

Vehicle exterior/fluid and battery checks - (ensure battery charger and body protection are fitted)

2.0 - Two technicians will be required for steps 2.1 and 2.2	**Completed**	**Not Completed**	**Comments**
2.1 Check exterior lighting function	○	○	
2.2 Check headlamp/windscreen washer system	○	○	
2.3 Check headlamp adjustment - Ref. AA-RM-02A02-04-003	○	○	
2.4 Replace wiper blade	○	○	
2.5 Check window glazing	○	○	
2.6 Check exterior light glazing	○	○	
2.7 Check gaps and seals of doors, engine cover, and luggage compartment lid	○	○	
2.8 Check fuel filler flap manual opening	○	○	

	Completed	Not Completed	Comments
2.9 Check controls and adjusters in general (hinges, doors, luggage lid and engine cover)	○	○	
2.10 Check battery connections and charge (physical check) - Ref. AA-RM-02A02-03-004	○	○	
2.11 Check cabin filter (replace as required) - Ref. AA-RM-02A02-03-004	○	○	
2.12 Check/adjust fluid level of brake system	○	○	
2.13 Check/adjust fluid level of power steering - Ref. AA-RM-03D01-01-008	○	○	
2.14 Check/adjust fluid level of windshield washer system	○	○	

Interior function checks

3.0 - Carry out cluster checks	Completed	Not Completed	Comments
3.1 Check battery condition	○	○	
3.2 Check engine oil level - Ref. AA-RM-04F02-01-007	○	○	
3.3 Check TPMS (Tyre Pressure Monitoring System)	○	○	
3.4 Check indicator lamps and warning lamps	○	○	
4.0 - Carry out IRIS checks	**Completed**	**Not Completed**	**Comments**
4.1 Check operation of IRIS system (audio/phone/sat nav/pc/cameras)	○	○	
5.0 - Carry out interior functional checks	**Completed**	**Not Completed**	**Comments**
5.1 Check central locking and alarm system	○	○	
5.2 Check interior controls (switches, lights, windows) and parking sensors (if fitted)	○	○	
5.3 Check heated rear window function	○	○	
5.4 Check operation of heating, ventilation and air conditioning system	○	○	
5.5 Check condition of interior trim (seats, door casings, centre console, facia, carpets)	○	○	
5.6 Check exterior door mirrors function and powerfold, rear view mirror, and sun visors	○	○	
5.7 Check condition and operation of seat belts/buckles (ensure belts are not twisted)	○	○	
5.8 Check brake pedal free play	○	○	
5.9 Check operation of EPB (Electronic Parking Brake)	○	○	

Mechanical checks

6.0 - Secure/lift vehicle on lifting platform - Ref. AA-RM-02A04-04-005					Completed	Not Completed	Comments
6.1 Check/enter tyre pressure	FL:	FR:	RL:	RR:	○	○	
6.2 Measure tread depth (mm)	FL:	FR:	RL:	RR:	○	○	
Outside							
Center							
Inside							
6.3 Check front/rear axle wheel bearing play					○	○	
6.4 Check front/rear ball joints for play					○	○	
6.5 Check front/rear track rods for play					○	○	

7.0 - Remove wheels - Ref. AA-RM-03B03-01-001	Completed	Not Completed	Comments
7.1 Check brake pads (replace if necessary)	○	○	
7.2 Check condition of brake discs (weigh all of them if CCM) - Ref. AA-RM-03C01-01-006	○	○	
7.3 Check EPB (Electronic Parking Brake) pads (replace if required)	○	○	
7.4 Check brake system for routing, leaks, and damage (bleed brakes if required)	○	○	
7.5 Check/clean air ducts of brake system	○	○	
8.0 - Remove all under floors - Ref. AA-RM-02A04-04-001/002/003/005/006/008	**Completed**	**Not Completed**	**Comments**
8.1 Check all visible parts for routing, leaks, and damage (cooling system)	○	○	
8.2 Check powertrain system for leaks (engine, transmission, and exhaust)	○	○	
8.3 Check all visible steering components for leaks and damage	○	○	
8.4 Check engine mounts	○	○	
8.5 Tighten screws, nuts, and bolts (including exhaust system, clips and strips in general)	○	○	
8.6 Check torques on suspension - Ref. AA-RM-03B01-02-002/003, 03B02-01-001/002	○	○	
8.7 Check condition of drive shafts	○	○	
9.0 - Remove rear wheel arch liners (carry out steps 9.2 to 9.6 while oil is draining)	**Completed**	**Not Completed**	**Comments**
9.1 Drain engine oil - Ref. AA-RM-04F02-01-011	○	○	
9.2 Check Z-bar drop links for play	○	○	
9.3 Check/clean air filter elements (replace as required) - Ref. AA-RM-04F01-02-002	○	○	
9.4 Check transmission and clutch fluids are not overfilled	○	○	
9.5 Check radiator/low temp cooler condition, check for any damage (clean as necessary)	○	○	
10.0 - Lower vehicle	**Completed**	**Not Completed**	**Comments**
10.1 Replace engine oil filter - Ref. AA-RM-04F02-01-003	○	○	
10.2 Fill engine oil (5 litres to start) - Ref. AA-RM-04F02-01-011	○	○	
10.3 Check engine oil level - Ref. AA-RM-04F02-01-007	○	○	
10.4 Top up and recheck level as required	○	○	
11.0 - Lift vehicle	**Completed**	**Not Completed**	**Comments**
11.1 Visual inspection for general leaks	○	○	

Underside of vehicle

12.0 - Install all under floors - Ref. AA-RM-02A04-04-001/002/003/005/006/008	Completed	Not Completed	Comments
12.1 Check tyre orientation, damage, and crack formations	○	○	
12.2 Install wheels - Ref. AA-RM-03B03-01-001	○	○	
13.0 - Lower vehicle to ground	**Completed**	**Not Completed**	**Comments**
13.1 Check wheel bolt torque values (130 Nm)	○	○	
13.2 Replace engine ISG (Intake Sound Generator) - Ref. AA-RM-04F01-01-037	○	○	
13.3 Check corrosion/antifreeze protection and enter here: °C	○	○	
13.4 Check exhaust emission label (market specific)	○	○	
13.5 Check injection/ignition system connections and harness	○	○	
13.6 Check/adjust fluid level of cooling system	○	○	
13.7 Check vehicle steering alignment (adjust as required)	○	○	
14.0 - Road test (carry out 14.1 and 14.2 whilst on test. Max 30 min / 6 miles)	**Completed**	**Not Completed**	**Comments**
14.1 Check airbrake function	○	○	
14.2 Check navigation system (if fitted)	○	○	
15.0 - Finish road test and carry out documents/safety device/final checks	**Completed**	**Not Completed**	**Comments**
15.1 Replace key fob battery and clean contacts with Electrolube CCS	○	○	
15.2 Check function of all keys, locks, and fobs	○	○	
15.3 Check for towing eye	○	○	
15.4 Read out fault memory, clear errors, and zero service interval counter via MDS	○	○	
15.5 Report and rectify all recorded defects	○	○	
15.6 Check/stamp service and warranty guide	○	○	

Associated Documents

Step Reference	Document Number	Document Title
2.3	AA-RM-02A02-04-003	Adjust headlamp
2.10 and 2.11	AA-RM-02A02-03-004	Remove/install luggage bin - Rear
2.13	AA-RM-03D01-01-008	Fill/bleed fluid - Steering system
6.0	AA-RM-02A04-04-007	Secure/lift vehicle on lifting platform
7.0 and 12.2	AA-RM-03B03-01-001	Remove/install Wheel
7.2	AA-RM-03C01-01-006	Cleaning/checking CCM brake discs
8.0 and 12.0	AA-RM-02A04-04-001	Remove/install floor panel - Engine/fuel tank
8.0 and 12.0	AA-RM-02A04-04-002	Remove/install floor panel - Front
8.0 and 12.0	AA-RM-02A04-04-003	Remove/install floor panel - Tunnel
8.0 and 12.0	AA-RM-02A04-04-005	Remove/install floor panel - Rear lower extension
8.0 and 12.0	AA-RM-02A04-04-006	Remove/install guide vane
8.0 and 12.0	AA-RM-02A04-04-008	Remove/install transmission floor panel
8.6	AA-RM-03B01-02-002	Remove/install lower wishbone - front
8.6	AA-RM-03B01-02-003	Remove/install upper wishbone - front
8.6	AA-RM-03B02-01-001	Remove/install upper wishbone - rear
8.6	AA-RM-03B02-01-002	Remove/install lower wishbone - rear
9.1 and 10.2	AA-RM-04F02-01-011	Drain and refill engine oil
9.3	AA-RM-04F01-02-002	Remove/install air filter
10.1	AA-RM-04F02-01-003	Remove/install Oil Filter
10.3	AA-RM-04F02-01-007	Check engine oil level
13.2	AA-RM-04F01-01-037	Remove/install intake sound generator

Consumables / Sundries	
Comments	
Technician Name: **Technician Signature:**	**Dealer Stamp:**

Printed copy is not controlled

Service sheet : 12th year or 180,000 km (120,000 miles)

Please check vehicle odometer reading against mileage dependant task service sheet before carrying out service

Customer:		**km / miles:**
Vehicle registration :	**VIN:**	**Date:**
Colour:		**Service Time: 7.65 units**
Address :		**Invoice / Job no:**

Vehicle acceptance (customer present from 1.1 to 1.4)

1.0 - Vehicle pre-checks	**Completed**	**Not Completed**	**Comments**
1.1 Check for wheel locking key (if supplied)	○	○	
1.2 Check tyre orientation, damage, and crack formations	○	○	
1.3 Inspect wheel rim condition	○	○	
1.4 Check bodywork	○	○	
1.5 Check McLaren Retailer Portal for any outstanding campaigns on vehicle	○	○	

Check paint and panels for defects - please mark the picture as following: (D dent - S scratch - X damage)

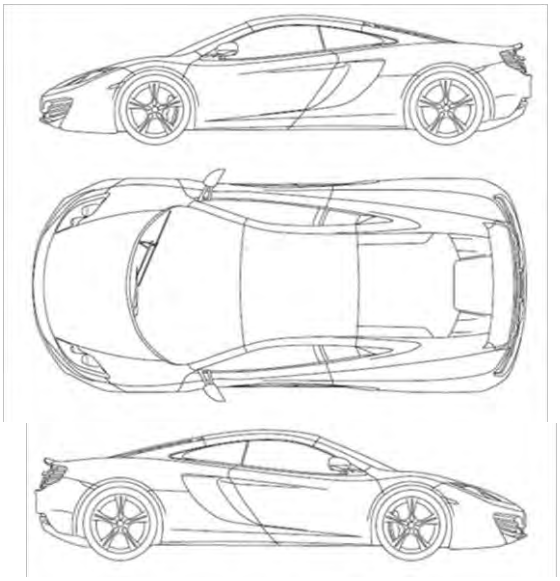

Vehicle exterior/fluid and battery checks - (ensure battery charger and body protection are fitted)

2.0 - Two technicians will be required for steps 2.1 and 2.2	**Completed**	**Not Completed**	**Comments**
2.1 Check exterior lighting function	○	○	
2.2 Check headlamp/windscreen washer system	○	○	
2.3 Check headlamp adjustment - Ref. AA-RM-02A02-04-003	○	○	
2.4 Replace wiper blade	○	○	
2.5 Check window glazing	○	○	
2.6 Check exterior light glazing	○	○	
2.7 Check gaps and seals of doors, engine cover, and luggage compartment lid	○	○	
2.8 Check fuel filler flap manual opening	○	○	

	Completed	Not Completed	Comments
2.9 Check controls and adjusters in general (hinges, doors, luggage lid and engine cover)	○	○	
2.10 Check battery connections and charge (physical check) - Ref. AA-RM-02A02-03-004	○	○	
2.11 Replace cabin filter - Ref. AA-RM-02A02-03-004	○	○	
2.12 Check/adjust fluid level of brake system	○	○	
2.13 Check/adjust fluid level of power steering - Ref. AA-RM-03D01-01-008	○	○	
2.14 Check/adjust fluid level of windshield washer system	○	○	

Interior function checks

3.0 - Carry out cluster checks	Completed	Not Completed	Comments
3.1 Check battery condition	○	○	
3.2 Check engine oil level - Ref. AA-RM-04F02-01-007	○	○	
3.3 Check TPMS (Tyre Pressure Monitoring System)	○	○	
3.4 Check indicator lamps and warning lamps	○	○	
4.0 - Carry out IRIS checks	**Completed**	**Not Completed**	**Comments**
4.1 Check operation of IRIS system (audio/phone/sat nav/pc/cameras)	○	○	
5.0 - Carry out interior functional checks	**Completed**	**Not Completed**	**Comments**
5.1 Check central locking and alarm system	○	○	
5.2 Check interior controls (switches, lights, windows) and parking sensors (if fitted)	○	○	
5.3 Check heated rear window function	○	○	
5.4 Check operation of heating, ventilation and air conditioning system	○	○	
5.5 Check condition of interior trim (seats, door casings, centre console, facia, carpets)	○	○	
5.6 Check exterior door mirrors function and powerfold, rear view mirror, and sun visors	○	○	
5.7 Check condition and operation of seat belts/buckles (ensure belts are not twisted)	○	○	
5.8 Check brake pedal free play	○	○	
5.9 Check operation of EPB (Electronic Parking Brake)	○	○	

Mechanical checks

6.0 - Secure/lift vehicle on lifting platform - Ref. AA-RM-02A04-04-005					Completed	Not Completed	Comments
6.1 Check/enter tyre pressure	FL:	FR:	RL:	RR:	○	○	
6.2 Measure tread depth (mm)	FL:	FR:	RL:	RR:	○	○	
Outside							
Center							
Inside							
6.3 Check front/rear axle wheel bearing play					○	○	
6.4 Check front/rear ball joints for play					○	○	
6.5 Check front/rear track rods for play					○	○	

7.0 - Remove wheels - Ref. AA-RM-03B03-01-001	**Completed**	**Not Completed**	**Comments**
7.1 Check brake pads (replace if necessary)	○	○	
7.2 Check condition of brake discs (weigh all of them if CCM) - Ref. AA-RM-03C01-01-006	○	○	
7.3 Replace electronic parking brake pads (every 2 years) - Ref. AA-RM-03C02-01-001	○	○	
7.4 Check brake system for leaks/damage (bleed as required) - Ref. AA-RM-03C01-01-005	○	○	
7.5 Check/clean air ducts of brake system	○	○	
8.0 - Remove all under floors - Ref. AA-RM-02A04-04-001/002/003/005/006/008	**Completed**	**Not Completed**	**Comments**
8.1 Check all visible parts for routing, leaks, and damage (cooling system)	○	○	
8.2 Check powertrain system for leaks (engine, transmission, and exhaust)	○	○	
8.3 Check all visible steering components for leaks and damage	○	○	
8.4 Check engine mounts	○	○	
8.5 Tighten screws, nuts, and bolts (including exhaust system, clips and strips in general)	○	○	
8.6 Check torques on suspension - Ref. AA-RM-03B01-02-002/003, 03B02-01-001/002	○	○	
8.7 Check condition of drive shafts	○	○	
9.0 - Remove rear wheel arch liners (carry out steps 9.2 to 9.8 while oil is draining)	**Completed**	**Not Completed**	**Comments**
Replace clutch oil and filter (Every 30,000km or 20,000 miles only)			
Replace fuel system filter (Every 90,000 km or 60,000 miles only)			
Replace transmission oil and clean filter (Every 60,000 km or 40,000 miles only)			
Replace cooling system fluid			
9.1 Drain engine oil - Ref. AA-RM-04F02-01-011	○	○	
9.2 Check Z-bar drop links for play	○	○	
9.3 Replace air filter - Ref. AA-RM-04F01-02-002	○	○	
9.4 Check radiator/low temp cooler condition, check for any damage (clean as necessary)	○	○	
9.5 Check transmission and clutch fluids (when mileage is not achieved) are not overfilled	○	○	
9.6 Replace cooling system fluid - Ref. AA-RM-03L01-01-005	○	○	
9.7 Replace clutch oil and filter (only if mileage achieved) AA-RM-04G01-01-015/021	○	○	
9.8 Replace fuel system filter (only if mileage achieved) - Ref. AA-RM-03K01-01-001	○	○	
9.9 Replace transmission oil / clean filter (only if mileage achieved) - Ref. AA-RM-04G01-01-014/016	○	○	
9.10 Visually check condensor area for debris	○	○	
9.11 Clean out condensor area (only if mileage achieved) - Ref. AA-RM-02A02-02-005	○	○	
10.0 - Lower vehicle	**Completed**	**Not Completed**	**Comments**
10.1 Replace engine oil filter - Ref. AA-RM-04F02-01-003	○	○	
10.2 Fill engine oil (5 litres to start) - Ref. AA-RM-04F02-01-011	○	○	
10.3 Check engine oil level - Ref. AA-RM-04F02-01-007	○	○	
10.4 Top up and recheck level as required	○	○	
11.0 - Lift vehicle	**Completed**	**Not Completed**	**Comments**
11.1 Visual inspection for general leaks	○	○	

Underside of vehicle

12.0 - Install all under floors - Ref. AA-RM-02A04-04-001/002/003/005/006/008	Completed	Not Completed	Comments
12.1 Check tyre orientation, damage, and crack formations	○	○	
12.2 Replace wheel nut bolts	○	○	
12.3 Install wheels - Ref. AA-RM-03B03-01-001	○	○	
13.0 - Lower vehicle to ground	**Completed**	**Not Completed**	**Comments**
Replace engine spark plugs (Every 90,000 km or 60,000 miles only)			
13.1 Check wheel bolt torque values (130 Nm)	○	○	
13.2 Replace engine ISG (Intake Sound Generator) - Ref. AA-RM-04F01-01-037	○	○	
13.3 Check corrosion/antifreeze protection and enter here: °C	○	○	
13.4 Check exhaust emission label (market specific)	○	○	
13.5 Replace engine spark plugs (only if mileage achieved) - Ref. AA-RM-04F01-01-026	○	○	
13.6 Check injection/ignition system connections and harness	○	○	
13.7 Check vehicle steering alignment (adjust as required)	○	○	
14.0 - Road test (carry out 14.1 and 14.2 whilst on test. Max 30 min / 6 miles)	**Completed**	**Not Completed**	**Comments**
14.1 Check airbrake function	○	○	
14.2 Check navigation system (if fitted)	○	○	
15.0 - Finish road test and carry out documents/safety device/final checks	**Completed**	**Not Completed**	**Comments**
15.1 Replace key fob battery and clean contacts with Electrolube CCS	○	○	
15.2 Check function of all keys, locks, and fobs	○	○	
15.3 Check for towing eye	○	○	
15.4 Check expiry dates of fire extinguisher/tyre inflation kit (if fitted)	○	○	
15.5 Read out fault memory, clear errors, and zero service interval counter via MDS	○	○	
15.6 Report and rectify all recorded defects	○	○	
15.7 Check/stamp service and warranty guide	○	○	

Associated Documents

Step Reference	Document Number	Document Title
2.3	AA-RM-02A02-04-003	Adjust headlamp
2.10 and 2.11	AA-RM-02A02-03-004	Remove/install luggage bin - Rear
2.13	AA-RM-03D01-01-008	Fill/bleed fluid - Steering system
6.0	AA-RM-02A04-04-007	Secure/lift vehicle on lifting platform
7.0 and 12.2	AA-RM-03B03-01-001	Remove/install Wheel
7.2	AA-RM-03C01-01-006	Cleaning/checking CCM brake discs
7.3	AA-RM-03C02-01-001	Remove/install pads - Parking brake
8.0 and 12.0	AA-RM-02A04-04-001	Remove/install floor panel - Engine/fuel tank
8.0 and 12.0	AA-RM-02A04-04-002	Remove/install floor panel - Front
8.0 and 12.0	AA-RM-02A04-04-003	Remove/install floor panel - Tunnel
8.0 and 12.0	AA-RM-02A04-04-005	Remove/install floor panel - Rear lower extension
8.0 and 12.0	AA-RM-02A04-04-006	Remove/install guide vane
8.0 and 12.0	AA-RM-02A04-04-008	Remove/install transmission floor panel
8.6	AA-RM-03B01-02-002	Remove/install lower wishbone - front
8.6	AA-RM-03B01-02-003	Remove/install upper wishbone - front
8.6	AA-RM-03B02-01-001	Remove/install upper wishbone - rear
8.6	AA-RM-03B02-01-002	Remove/install lower wishbone - rear
9.1 and 10.2	AA-RM-04F02-01-011	Drain and refill engine oil
9.3	AA-RM-04F01-02-002	Remove/install air filter
9.6	AA-RM-03L01-01-005	Drain and refill cooling system
9.7	AA-RM-04G01-01-015	Drain and refill - Clutch fluid
9.7	AA-RM-04G01-01-017	Remove/install filter - Clutch fluid
9.8	AA-RM-03K01-01-001	Remove/install fuel filter
9.9	AA-RM-04G01-01-014	Drain and refill - Transmission Fluid
9.9	AA-RM-04G01-01-016	Remove/install filter - Transmission fluid
9.11	AA-RM-02A02-02-005	Remove/install Radiator grille
10.1	AA-RM-04F02-01-003	Remove/install oil filter
10.3	AA-RM-04F02-01-007	Check engine oil level
13.5	AA-RM-04F01-01-026	Remove/install spark plug
13.2	AA-RM-04F01-01-037	Remove/install intake sound generator

Consumables / Sundries	
Comments	
Technician Name: **Technician Signature:**	**Dealer Stamp:**

Printed copy is not controlled

Service sheet : 13th year or 195,000 km (130,000 miles)

Please check vehicle odometer reading against mileage dependant task service sheet before carrying out service

Customer:		**km / miles:**
Vehicle registration :	**VIN:**	**Date:**
Colour:		**Service Time: 5.85 units**
Address :		**Invoice / Job no:**

Vehicle acceptance (customer present from 1.1 to 1.4)

1.0 - Vehicle pre-checks	**Completed**	**Not Completed**	**Comments**
1.1 Check for wheel locking key (if supplied)	○	○	
1.2 Check tyre orientation, damage, and crack formations	○	○	
1.3 Inspect wheel rim condition	○	○	
1.4 Check bodywork	○	○	
1.5 Check McLaren Retailer Portal for any outstanding campaigns on vehicle	○	○	

Check paint and panels for defects - please mark the picture as following: (D dent - S scratch - X damage)

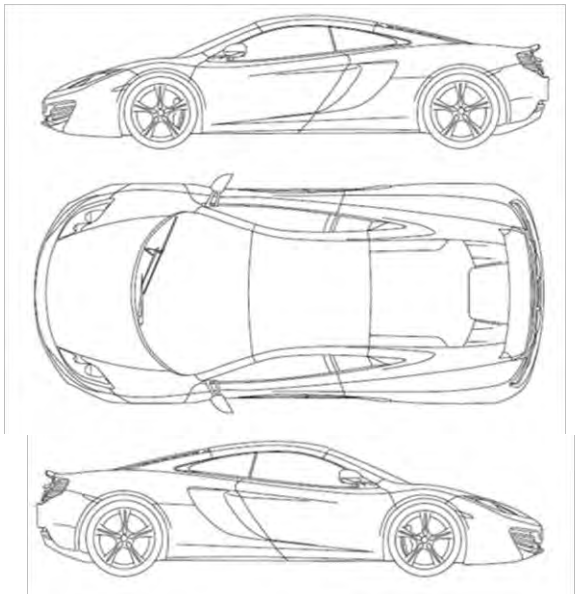

Vehicle exterior/fluid and battery checks - (ensure battery charger and body protection are fitted)

2.0 - Two technicians will be required for steps 2.1 and 2.2	**Completed**	**Not Completed**	**Comments**
2.1 Check exterior lighting function	○	○	
2.2 Check headlamp/windscreen washer system	○	○	
2.3 Check headlamp adjustment - Ref. AA-RM-02A02-04-003	○	○	
2.4 Replace wiper blade	○	○	
2.5 Check window glazing	○	○	
2.6 Check exterior light glazing	○	○	
2.7 Check gaps and seals of doors, engine cover, and luggage compartment lid	○	○	
2.8 Check fuel filler flap manual opening	○	○	

	Completed	Not Completed	Comments
2.9 Check controls and adjusters in general (hinges, doors, luggage lid and engine cover)	○	○	
2.10 Check battery connections and charge (physical check) - Ref. AA-RM-02A02-03-004	○	○	
2.11 Check cabin filter (replace as required) - Ref. AA-RM-02A02-03-004	○	○	
2.12 Check/adjust fluid level of brake system	○	○	
2.13 Check/adjust fluid level of power steering - Ref. AA-RM-03D01-01-008	○	○	
2.14 Check/adjust fluid level of windshield washer system	○	○	

Interior function checks

3.0 - Carry out cluster checks	Completed	Not Completed	Comments
3.1 Check battery condition	○	○	
3.2 Check engine oil level - Ref. AA-RM-04F02-01-007	○	○	
3.3 Check TPMS (Tyre Pressure Monitoring System)	○	○	
3.4 Check indicator lamps and warning lamps	○	○	
4.0 - Carry out IRIS checks	**Completed**	**Not Completed**	**Comments**
4.1 Check operation of IRIS system (audio/phone/sat nav/pc/cameras)	○	○	
5.0 - Carry out interior functional checks	**Completed**	**Not Completed**	**Comments**
5.1 Check central locking and alarm system	○	○	
5.2 Check interior controls (switches, lights, windows) and parking sensors (if fitted)	○	○	
5.3 Check heated rear window function	○	○	
5.4 Check operation of heating, ventilation and air conditioning system	○	○	
5.5 Check condition of interior trim (seats, door casings, centre console, facia, carpets)	○	○	
5.6 Check exterior door mirrors function and powerfold, rear view mirror, and sun visors	○	○	
5.7 Check condition and operation of seat belts/buckles (ensure belts are not twisted)	○	○	
5.8 Check brake pedal free play	○	○	
5.9 Check operation of EPB (Electronic Parking Brake)	○	○	

Mechanical checks

6.0 - Secure/lift vehicle on lifting platform - Ref. AA-RM-02A04-04-005					Completed	Not Completed	Comments
6.1 Check/enter tyre pressure	FL:	FR:	RL:	RR:	○	○	
6.2 Measure tread depth (mm)	FL:	FR:	RL:	RR:	○	○	
Outside							
Center							
Inside							
6.3 Check front/rear axle wheel bearing play					○	○	
6.4 Check front/rear ball joints for play					○	○	
6.5 Check front/rear track rods for play					○	○	

7.0 - Remove wheels - Ref. AA-RM-03B03-01-001	Completed	Not Completed	Comments
7.1 Check brake pads (replace if necessary)	○	○	
7.2 Check condition of brake discs (weigh all of them if CCM) - Ref. AA-RM-03C01-01-006	○	○	
7.3 Check EPB (Electronic Parking Brake) pads (replace if required)	○	○	
7.4 Check brake system for routing, leaks, and damage (bleed brakes if required)	○	○	
7.5 Check/clean air ducts of brake system	○	○	
8.0 - Remove all under floors - Ref. AA-RM-02A04-04-001/002/003/005/006/008	**Completed**	**Not Completed**	**Comments**
8.1 Check all visible parts for routing, leaks, and damage (cooling system)	○	○	
8.2 Check powertrain system for leaks (engine, transmission, and exhaust)	○	○	
8.3 Check all visible steering components for leaks and damage	○	○	
8.4 Check engine mounts	○	○	
8.5 Tighten screws, nuts, and bolts (including exhaust system, clips and strips in general)	○	○	
8.6 Check torques on suspension - Ref. AA-RM-03B01-02-002/003, 03B02-01-001/002	○	○	
8.7 Check condition of drive shafts	○	○	
9.0 - Remove rear wheel arch liners (carry out steps 9.2 to 9.5 while oil is draining)	**Completed**	**Not Completed**	**Comments**
9.1 Drain engine oil - Ref. AA-RM-04F02-01-011	○	○	
9.2 Check Z-bar drop links for play	○	○	
9.3 Check/clean air filter elements (replace as required) - Ref. AA-RM-04F01-02-002	○	○	
9.4 Check transmission and clutch fluids are not overfilled	○	○	
9.5 Check radiator/low temp cooler condition, check for any damage (clean as necessary)	○	○	
10.0 - Lower vehicle	**Completed**	**Not Completed**	**Comments**
10.1 Replace engine oil filter - Ref. AA-RM-04F02-01-003	○	○	
10.2 Fill engine oil (5 litres to start) - Ref. AA-RM-04F02-01-011	○	○	
10.3 Check engine oil level - Ref. AA-RM-04F02-01-007	○	○	
10.4 Top up and recheck level as required	○	○	
11.0 - Lift vehicle	**Completed**	**Not Completed**	**Comments**
11.1 Visual inspection for general leaks	○	○	

Underside of vehicle

12.0 - Install all under floors - Ref. AA-RM-02A04-04-001/002/003/005/006/008	Completed	Not Completed	Comments
12.1 Check tyre orientation, damage, and crack formations	○	○	
12.2 Install wheels - Ref. AA-RM-03B03-01-001	○	○	
13.0 - Lower vehicle to ground	**Completed**	**Not Completed**	**Comments**
13.1 Check wheel bolt torque values (130 Nm)	○	○	
13.2 Replace engine ISG (Intake Sound Generator) - Ref. AA-RM-04F01-01-037	○	○	
13.3 Check corrosion/antifreeze protection and enter here: °C	○	○	
13.4 Check exhaust emission label (market specific)	○	○	
13.5 Check injection/ignition system connections and harness	○	○	
13.6 Check/adjust fluid level of cooling system	○	○	
13.7 Check vehicle steering alignment (adjust as required)	○	○	
14.0 - Road test (carry out 14.1 and 14.2 whilst on test. Max 30 min / 6 miles)	**Completed**	**Not Completed**	**Comments**
14.1 Check airbrake function	○	○	
14.2 Check navigation system (if fitted)	○	○	
15.0 - Finish road test and carry out documents/safety device/final checks	**Completed**	**Not Completed**	**Comments**
15.1 Replace key fob battery and clean contacts with Electrolube CCS	○	○	
15.2 Check function of all keys, locks, and fobs	○	○	
15.3 Check for towing eye	○	○	
15.4 Read out fault memory, clear errors, and zero service interval counter via MDS	○	○	
15.5 Report and rectify all recorded defects	○	○	
15.6 Check/stamp service and warranty guide	○	○	

Associated Documents

Step Reference	Document Number	Document Title
2.3	AA-RM-02A02-04-003	Adjust headlamp
2.10 and 2.11	AA-RM-02A02-03-004	Remove/install luggage bin - Rear
2.13	AA-RM-03D01-01-008	Fill/bleed fluid - Steering system
6.0	AA-RM-02A04-04-007	Secure/lift vehicle on lifting platform
7.0 and 12.2	AA-RM-03B03-01-001	Remove/install Wheel
7.2	AA-RM-03C01-01-006	Cleaning/checking CCM brake discs
8.0 and 12.0	AA-RM-02A04-04-001	Remove/install floor panel - Engine/fuel tank
8.0 and 12.0	AA-RM-02A04-04-002	Remove/install floor panel - Front
8.0 and 12.0	AA-RM-02A04-04-003	Remove/install floor panel - Tunnel
8.0 and 12.0	AA-RM-02A04-04-005	Remove/install floor panel - Rear lower extension
8.0 and 12.0	AA-RM-02A04-04-006	Remove/install guide vane
8.0 and 12.0	AA-RM-02A04-04-008	Remove/install transmission floor panel
8.6	AA-RM-03B01-02-002	Remove/install lower wishbone - front
8.6	AA-RM-03B01-02-003	Remove/install upper wishbone - front
8.6	AA-RM-03B02-01-001	Remove/install upper wishbone - rear
8.6	AA-RM-03B02-01-002	Remove/install lower wishbone - rear
9.1 and 10.2	AA-RM-04F02-01-011	Drain and refill engine oil
9.3	AA-RM-04F01-02-002	Remove/install air filter
10.1	AA-RM-04F02-01-003	Remove/install Oil Filter
10.3	AA-RM-04F02-01-007	Check engine oil level
13.2	AA-RM-04F01-01-037	Remove/install intake sound generator

Consumables / Sundries	
Comments	
Technician Name: **Technician Signature:**	**Dealer Stamp:**

Printed copy is not controlled

Service sheet : 14th year or 210,000 km (140,000 miles)

Please check vehicle odometer reading against mileage dependant task service sheet before carrying out service

Customer:		**km / miles:**
Vehicle registration :	**VIN:**	**Date:**
Colour:		**Service Time: 6.8 units**
Address :		**Invoice / Job no:**

Vehicle acceptance (customer present from 1.1 to 1.4)

1.0 - Vehicle pre-checks	**Completed**	**Not Completed**	**Comments**
1.1 Check for wheel locking key (if supplied)	○	○	
1.2 Check tyre orientation, damage, and crack formations	○	○	
1.3 Inspect wheel rim condition	○	○	
1.4 Check bodywork	○	○	
1.5 Check McLaren Retailer Portal for any outstanding campaigns on vehicle	○	○	

Check paint and panels for defects - please mark the picture as following: (D dent - S scratch - X damage)

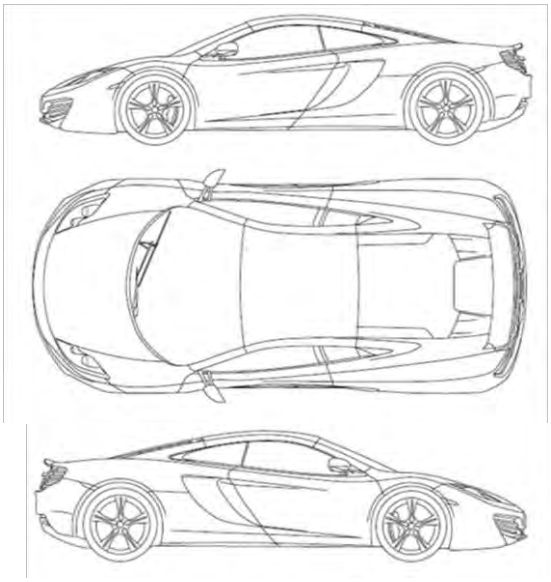

Vehicle exterior/fluid and battery checks - (ensure battery charger and body protection are fitted)

2.0 - Two technicians will be required for steps 2.1 and 2.2	**Completed**	**Not Completed**	**Comments**
2.1 Check exterior lighting function	○	○	
2.2 Check headlamp/windscreen washer system	○	○	
2.3 Check headlamp adjustment - Ref. AA-RM-02A02-04-003	○	○	
2.4 Replace wiper blade	○	○	
2.5 Check window glazing	○	○	
2.6 Check exterior light glazing	○	○	
2.7 Check gaps and seals of doors, engine cover, and luggage compartment lid	○	○	
2.8 Check fuel filler flap manual opening	○	○	

	Completed	Not Completed	Comments
2.9 Check controls and adjusters in general (hinges, doors, luggage lid and engine cover)	○	○	
2.10 Check battery connections and charge (physical check) - Ref. AA-RM-02A02-03-004	○	○	
2.11 Replace cabin filter - Ref. AA-RM-02A02-03-004	○	○	
2.12 Bleed brake fluid system as required (while servicing) - Ref. AA-RM-03C01-01-005	○	○	
2.13 Check/adjust fluid level of power steering - Ref. AA-RM-03D01-01-008	○	○	
2.14 Check/adjust fluid level of windshield washer system	○	○	

Interior function checks

3.0 - Carry out cluster checks	Completed	Not Completed	Comments
3.1 Check battery condition	○	○	
3.2 Check engine oil level - Ref. AA-RM-04F02-01-007	○	○	
3.3 Check TPMS (Tyre Pressure Monitoring System)	○	○	
3.4 Check indicator lamps and warning lamps	○	○	
4.0 - Carry out IRIS checks	**Completed**	**Not Completed**	**Comments**
4.1 Check operation of IRIS system (audio/phone/sat nav/pc/cameras)	○	○	
5.0 - Carry out interior functional checks	**Completed**	**Not Completed**	**Comments**
5.1 Check central locking and alarm system	○	○	
5.2 Check interior controls (switches, lights, windows) and parking sensors (if fitted)	○	○	
5.3 Check heated rear window function	○	○	
5.4 Check operation of heating, ventilation and air conditioning system	○	○	
5.5 Check condition of interior trim (seats, door casings, centre console, facia, carpets)	○	○	
5.6 Check exterior door mirrors function and powerfold, rear view mirror, and sun visors	○	○	
5.7 Check condition and operation of seat belts/buckles (ensure belts are not twisted)	○	○	
5.8 Check brake pedal free play	○	○	
5.9 Check operation of EPB (Electronic Parking Brake)	○	○	

Mechanical checks

6.0 - Secure/lift vehicle on lifting platform - Ref. AA-RM-02A04-04-005					Completed	Not Completed	Comments
6.1 Check/enter tyre pressure	FL:	FR:	RL:	RR:	○	○	
6.2 Measure tread depth (mm)	FL:	FR:	RL:	RR:	○	○	
Outside							
Center							
Inside							
6.3 Check front/rear axle wheel bearing play					○	○	
6.4 Check front/rear ball joints for play					○	○	
6.5 Check front/rear track rods for play					○	○	

7.0 - Remove wheels - Ref. AA-RM-03B03-01-001	Completed	Not Completed	Comments
7.1 Check brake pads (replace if necessary)	○	○	
7.2 Check condition of brake discs (weigh all of them if CCM) - Ref. AA-RM-03C01-01-006	○	○	
7.3 Replace electronic parking brake pads (every 2 years) - Ref. AA-RM-03C02-01-001	○	○	
7.4 Check brake system for leaks/damage (bleed as required) - Ref. AA-RM-03C01-01-005	○	○	
7.5 Check/clean air ducts of brake system	○	○	
8.0 - Remove all under floors - Ref. AA-RM-02A04-04-001/002/003/005/006/008	**Completed**	**Not Completed**	**Comments**
8.1 Check all visible parts for routing, leaks, and damage (cooling system)	○	○	
8.2 Check powertrain system for leaks (engine, transmission, and exhaust)	○	○	
8.3 Check all visible steering components for leaks and damage	○	○	
8.4 Check engine mounts	○	○	
8.5 Tighten screws, nuts, and bolts (including exhaust system, clips and strips in general)	○	○	
8.6 Check torques on suspension - Ref. AA-RM-03B01-02-002/003, 03B02-01-001/002	○	○	
8.7 Check condition of drive shafts	○	○	
9.0 - Remove rear wheel arch liners (carry out steps 9.2 to 9.6 while oil is draining)	**Completed**	**Not Completed**	**Comments**
Replace clutch oil and filter (Every 30,000km or 20,000 miles only)			
9.1 Drain engine oil - Ref. AA-RM-04F02-01-011	○	○	
9.2 Check Z-bar drop links for play	○	○	
9.3 Replace air filter - Ref. AA-RM-04F01-02-002	○	○	
9.4 Check radiator/low temp cooler condition, check for any damage (clean as necessary)	○	○	
9.5 Check transmission and clutch fluids (when mileage is not achieved) are not overfilled	○	○	
9.6 Replace clutch oil and filter (only if mileage achieved) - Ref. AA-RM-04G01-01-015/021	○	○	
9.7 Visually check condensor area for debris	○	○	
10.0 - Lower vehicle	**Completed**	**Not Completed**	**Comments**
10.1 Replace engine oil filter - Ref. AA-RM-04F02-01-003	○	○	
10.2 Fill engine oil (5 litres to start) - Ref. AA-RM-04F02-01-011	○	○	
10.3 Check engine oil level - Ref. AA-RM-04F02-01-007	○	○	
10.4 Top up and re-check level as required	○	○	
11.0 - Lift vehicle	**Completed**	**Not Completed**	**Comments**
11.1 Visual inspection for general leaks	○	○	

Underside of vehicle

12.0 - Install all under floors - Ref. AA-RM-02A04-04-001/002/003/005/006/008	Completed	Not Completed	Comments
12.1 Check tyre orientation, damage, and crack formations	○	○	
12.2 Replace wheel nut bolts	○	○	
12.3 Install wheels - Ref. AA-RM-03B03-01-001	○	○	
13.0 - Lower vehicle to ground	**Completed**	**Not Completed**	**Comments**
13.1 Check wheel bolt torque values (130 Nm)	○	○	
13.2 Replace engine ISG (Intake Sound Generator) - Ref. AA-RM-04F01-01-037	○	○	
13.3 Check corrosion/antifreeze protection and enter here: °C	○	○	
13.4 Check exhaust emission label (market specific)	○	○	
13.5 Check injection/ignition system connections and harness	○	○	
13.6 Check/adjust fluid level of cooling system	○	○	
13.7 Check vehicle steering alignment (adjust as required)	○	○	
14.0 - Road test (carry out 14.1 and 14.2 whilst on test. Max 30 min / 6 miles)	**Completed**	**Not Completed**	**Comments**
14.1 Check airbrake function	○	○	
14.2 Check navigation system (if fitted)	○	○	
15.0 - Finish road test and carry out documents/safety device/final checks	**Completed**	**Not Completed**	**Comments**
15.1 Replace key fob battery and clean contacts with Electrolube CCS	○	○	
15.2 Check function of all keys, locks, and fobs	○	○	
15.3 Check for towing eye	○	○	
15.4 Read out fault memory, clear errors, and zero service interval counter via MDS	○	○	
15.5 Report and rectify all recorded defects	○	○	
15.6 Check/stamp service and warranty guide	○	○	

Associated Documents

Step Reference	Document Number	Document Title
2.10 and 2.11	AA-RM-02A02-03-004	Remove/install luggage bin - Rear
2.12 and 7.4	AA-RM-03C01-01-005	Fill/bleed fluid - Brake system
2.13	AA-RM-03D01-01-008	Fill/bleed fluid - Steering system
6.0	AA-RM-02A04-04-007	Secure/lift vehicle on lifting platform
7.0 and 12.3	AA-RM-03B03-01-001	Remove/install Wheel
7.2	AA-RM-03C01-01-006	Cleaning/checking CCM brake discs
7.3	AA-RM-03C02-01-001	Remove/install pads - parking brake
8.0 and 12.0	AA-RM-02A04-04-001	Remove/install floor panel - Engine/fuel tank
8.0 and 12.0	AA-RM-02A04-04-002	Remove/install floor panel - Front
8.0 and 12.0	AA-RM-02A04-04-003	Remove/install floor panel - Tunnel
8.0 and 12.0	AA-RM-02A04-04-005	Remove/install floor panel - Rear lower extension
8.0 and 12.0	AA-RM-02A04-04-006	Remove/install guide vane
8.0 and 12.0	AA-RM-02A04-04-008	Remove/install transmission floor panel
8.6	AA-RM-03B01-02-002	Remove/install lower wishbone - front
8.6	AA-RM-03B01-02-003	Remove/install upper wishbone - front
8.6	AA-RM-03B02-01-001	Remove/install upper wishbone - rear
8.6	AA-RM-03B02-01-002	Remove/install lower wishbone - rear
9.1 and 10.2	AA-RM-04F02-01-011	Drain and refill engine oil
9.3	AA-RM-04F01-02-002	Remove/install air filter
9.6	AA-RM-04G01-01-015	Drain and refill - Clutch fluid
9.6	AA-RM-04G01-01-017	Remove/install filter - Clutch
10.1	AA-RM-04F02-01-003	Remove/install Oil Filter
10.3	AA-RM-04F02-01-007	Check engine oil level
13.2	AA-RM-04F01-01-037	Remove/install intake sound generator

Consumables / Sundries	
Comments	
Technician Name: **Technician Signature:**	**Dealer Stamp:**

Printed copy is not controlled

Service sheet : 15th year or 225,000 km (150,000 miles)

Please check vehicle odometer reading against mileage dependant task service sheet before carrying out service

Customer:		**km / miles:**
Vehicle registration :	**VIN:**	**Date:**
Colour:		**Service Time: 12.0 units**
Address :		**Invoice / Job no:**

Vehicle acceptance (customer present from 1.1 to 1.4)

1.0 - Vehicle pre-checks	**Completed**	**Not Completed**	**Comments**
1.1 Check for wheel locking key (if supplied)	○	○	
1.2 Check tyre orientation, damage, and crack formations	○	○	
1.3 Inspect wheel rim condition	○	○	
1.4 Check bodywork	○	○	
1.5 Check McLaren Retailer Portal for any outstanding campaigns on vehicle	○	○	

Check paint and panels for defects - please mark the picture as following: (D dent - S scratch - X damage)

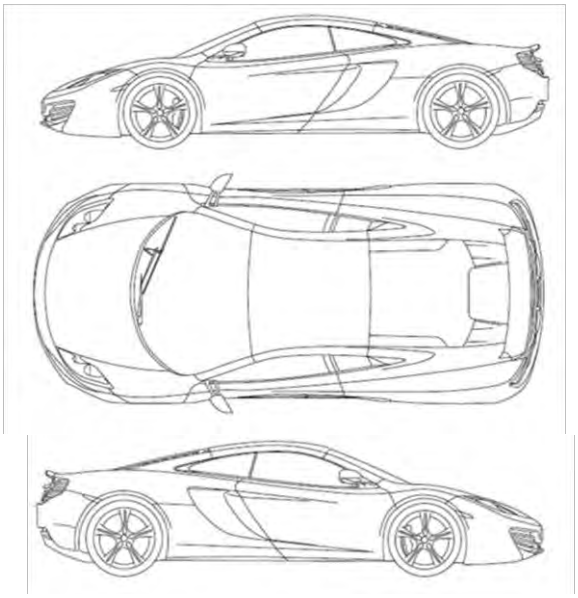

Vehicle exterior/fluid and battery checks - (ensure battery charger and body protection are fitted)

2.0 - Two technicians will be required for steps 2.1 and 2.2	**Completed**	**Not Completed**	**Comments**
2.1 Check exterior lighting function	○	○	
2.2 Check headlamp/windscreen washer system	○	○	
2.3 Check headlamp adjustment - Ref. AA-RM-02A02-04-003	○	○	
2.4 Replace wiper blade	○	○	
2.5 Check window glazing	○	○	
2.6 Check exterior light glazing	○	○	
2.7 Check gaps and seals of doors, engine cover, and luggage compartment lid	○	○	
2.8 Check fuel filler flap manual opening	○	○	

	Completed	Not Completed	Comments
2.9 Check controls and adjusters in general (hinges, doors, luggage lid and engine cover)	○	○	
2.10 Check battery connections and charge (physical check) - Ref. AA-RM-02A02-03-004	○	○	
2.11 Check cabin filter (replace as required) - Ref. AA-RM-02A02-03-004	○	○	
2.12 Check/adjust fluid level of brake system	○	○	
2.13 Check/adjust fluid level of power steering - Ref. AA-RM-03D01-01-008	○	○	
2.14 Check/adjust fluid level of windshield washer system	○	○	

Interior function checks

3.0 - Carry out cluster checks	**Completed**	**Not Completed**	**Comments**
3.1 Check battery condition	○	○	
3.2 Check engine oil level - Ref. AA-RM-04F02-01-007	○	○	
3.3 Check TPMS (Tyre Pressure Monitoring System)	○	○	
3.4 Check indicator lamps and warning lamps	○	○	
4.0 - Carry out IRIS checks	**Completed**	**Not Completed**	**Comments**
4.1 Check operation of IRIS system (audio/phone/sat nav/pc/cameras)	○	○	
5.0 - Carry out interior functional checks	**Completed**	**Not Completed**	**Comments**
5.1 Check central locking and alarm system	○	○	
5.2 Check interior controls (switches, lights, windows) and parking sensors (if fitted)	○	○	
5.3 Check heated rear window function	○	○	
5.4 Check operation of heating, ventilation and air conditioning system	○	○	
5.5 Check condition of interior trim (seats, door casings, centre console, facia, carpets)	○	○	
5.6 Check exterior door mirrors function and powerfold, rear view mirror, and sun visors	○	○	
5.7 Check condition and operation of seat belts/buckles (ensure belts are not twisted)	○	○	
5.8 Check brake pedal free play	○	○	
5.9 Check operation of EPB (Electronic Parking Brake)	○	○	

Mechanical checks

6.0 - Secure/lift vehicle on lifting platform - Ref. AA-RM-02A04-04-005					**Completed**	**Not Completed**	**Comments**
6.1 Check/enter tyre pressure	FL:	FR:	RL:	RR:	○	○	
6.2 Measure tread depth (mm)	FL:	FR:	RL:	RR:	○	○	
Outside							
Center							
Inside							
6.3 Check front/rear axle wheel bearing play					○	○	
6.4 Check front/rear ball joints for play					○	○	
6.5 Check front/rear track rods for play					○	○	

7.0 - Remove wheels - Ref. AA-RM-03B03-01-001	Completed	Not Completed	Comments
7.1 Check brake pads (replace if necessary)	○	○	
7.2 Check condition of brake discs (weigh all of them if CCM) - Ref. AA-RM-03C01-01-006	○	○	
7.3 Check EPB (Electronic Parking Brake) pads (replace if required)	○	○	
7.4 Check brake system for leaks/damage (bleed as required) - Ref. AA-RM-03C01-01-005	○	○	
7.5 Check/clean air ducts of brake system	○	○	
8.0 - Remove all under floors - Ref. AA-RM-02A04-04-001/002/003/005/006/008	**Completed**	**Not Completed**	**Comments**
8.1 Check all visible parts for routing, leaks, and damage (cooling system)	○	○	
8.2 Check powertrain system for leaks (engine, transmission, and exhaust)	○	○	
8.3 Check all visible steering components for leaks and damage	○	○	
8.4 Check engine mounts	○	○	
8.5 Tighten screws, nuts, and bolts (including exhaust system, clips and strips in general)	○	○	
8.6 Check torques on suspension - Ref. AA-RM-03B01-02-002/003, 03B02-01-001/002	○	○	
8.7 Check condition of drive shafts	○	○	
9.0 - Remove rear wheel arch liners (carry out steps 9.2 to 9.6 while oil is draining)	**Completed**	**Not Completed**	**Comments**
Replace cooling system fluid			
9.1 Drain engine oil - Ref. AA-RM-04F02-01-011	○	○	
9.2 Check Z-bar drop links for play	○	○	
9.3 Check/clean air filter elements (replace as required) - Ref. AA-RM-04F01-02-002	○	○	
9.4 Check transmission and clutch fluids are not overfilled	○	○	
9.5 Check radiator/low temp cooler condition, check for any damage (clean as necessary)	○	○	
9.6 Replace cooling system fluid - Ref. AA-RM-03L01-01-005	○	○	
10.0 - Lower vehicle	**Completed**	**Not Completed**	**Comments**
10.1 Replace engine oil filter - Ref. AA-RM-04F02-01-003	○	○	
10.2 Fill engine oil (5 litres to start) - Ref. AA-RM-04F02-01-011	○	○	
10.3 Check engine oil level - Ref. AA-RM-04F02-01-007	○	○	
10.4 Top up and recheck level as required	○	○	
11.0 - Lift vehicle	**Completed**	**Not Completed**	**Comments**
11.1 Visual inspection for general leaks	○	○	

Underside of vehicle

12.0 - Install all under floors - Ref. AA-RM-02A04-04-001/002/003/005/006/008	Completed	Not Completed	Comments
12.1 Check tyre orientation, damage, and crack formations	○	○	
12.2 Install wheels - Ref. AA-RM-03B03-01-001	○	○	
13.0 - Lower vehicle to ground	**Completed**	**Not Completed**	**Comments**
13.1 Check wheel bolt torque values (130 Nm)	○	○	
13.2 Replace engine ISG (Intake Sound Generator) - Ref. AA-RM-04F01-01-037	○	○	
13.3 Check corrosion/antifreeze protection and enter here: °C	○	○	
13.4 Check exhaust emission label (market specific)	○	○	
13.5 Check injection/ignition system connections and harness	○	○	
13.7 Check vehicle steering alignment (adjust as required)	○	○	
14.0 Ensure battery is disconnected - Ref. AA-RM-05M01-01-001	**Completed**	**Not Completed**	**Comments**
Replace all airbags and seatbelts (15 years only)			
14.1 Replace driver airbag - Ref. AA-RM-06N04-01-003	○	○	
14.2 Replace passenger airbag - Ref. AA-RM-06N04-01-004	○	○	
14.3 Replace driver head curtain airbags - Ref. AA-RM-06N04-01-002	○	○	
14.4 Replace passenger head curtain airbags - Ref. AA-RM-06N04-01-002	○	○	
14.5 Replace driver kneebag (market specific)	○	○	
14.6 Replace passenger kneebag (market specific)	○	○	
14.7 Replace driver seatbelt - Ref. AA-RM-06N04-01-001	○	○	
14.8 Replace passenger seatbelt - Ref. AA-RM-06N04-01-001	○	○	
15.0 - Road test (carry out 14.1 and 14.2 whilst on test. Max 30 min / 6 miles)	**Completed**	**Not Completed**	**Comments**
15.1 Check airbrake function	○	○	
15.2 Check navigation system (if fitted)	○	○	
16.0 - Finish road test and carry out documents/safety device/final checks	**Completed**	**Not Completed**	**Comments**
16.1 Replace key fob battery and clean contacts with Electrolube CCS	○	○	
16.2 Check function of all keys, locks, and fobs	○	○	
16.3 Check for towing eye	○	○	
16.4 Check expiry dates of fire extinguisher/tyre inflation kit (if fitted)	○	○	
16.5 Read out fault memory, clear errors, and zero service interval counter via MDS	○	○	
16.6 Report and rectify all recorded defects	○	○	
16.7 Check/stamp service and warranty guide	○	○	

Associated Documents

Step Reference	Document Number	Document Title
2.3	AA-RM-02A02-04-003	Adjust headlamp
2.10 and 2.11	AA-RM-02A02-03-004	Remove/install luggage bin - Rear
2.13	AA-RM-03D01-01-008	Fill/bleed fluid - Steering system
6.0	AA-RM-02A04-04-007	Secure/lift vehicle on lifting platform
7.0 and 12.2	AA-RM-03B03-01-001	Remove/install Wheel
7.2	AA-RM-03C01-01-006	Cleaning/checking CCM brake discs
8.0 and 12.0	AA-RM-02A04-04-001	Remove/install floor panel - Engine/fuel tank
8.0 and 12.0	AA-RM-02A04-04-002	Remove/install floor panel - Front
8.0 and 12.0	AA-RM-02A04-04-003	Remove/install floor panel - Tunnel
8.0 and 12.0	AA-RM-02A04-04-005	Remove/install floor panel - Rear lower extension
8.0 and 12.0	AA-RM-02A04-04-006	Remove/install guide vane
8.0 and 12.0	AA-RM-02A04-04-008	Remove/install transmission floor panel
8.6	AA-RM-03B01-02-002	Remove/install lower wishbone - front
8.6	AA-RM-03B01-02-003	Remove/install upper wishbone - front
8.6	AA-RM-03B02-01-001	Remove/install upper wishbone - rear
8.6	AA-RM-03B02-01-002	Remove/install lower wishbone - rear
9.1 and 10.2	AA-RM-04F02-01-011	Drain and refill engine oil
9.3	AA-RM-04F01-02-002	Remove/install air filter
9.6	AA-RM-03L01-01-005	Drain and refill cooling system
10.1	AA-RM-04F02-01-003	Remove/install Oil Filter
10.3	AA-RM-04F02-01-007	Check engine oil level
13.2	AA-RM-04F01-01-037	Remove/install intake sound generator
14.1	AA-RM-06N04-01-003	Remove/install driver airbag
14.2	AA-RM-06N04-01-004	Remove/install passenger airbag
14.3 and 14.4	AA-RM-06N04-01-002	Remove/install head curtain airbag
14.5	AA-RM-06N04-01-007	Remove/install driver kneebag
14.6	AA-RM-06N04-01-006	Remove/install passenger kneebag
14.7 and 14.8	AA-RM-06N04-01-001	Remove/install seatbelt

Consumables / Sundries	
Comments	
Technician Name: **Technician Signature:**	**Dealer Stamp:**

Printed copy is not controlled

Track Day Event Pre/Post Checks

All checks to be carried out to the vehicle before/after a track day event

Customer :		**km / miles :**
Vehicle registration :	**VIN :**	**Date :**
Colour :		**Service Time : 1.25 units (Fe discs) - 2.50 units (CCM discs)**
Address :		**Invoice / Job no :**

Vehicle exterior and fluid checks

1.0 - Two technicians will be required for steps 1.1 and 1.2	**Completed**	**Not Completed**	**Rectified**
1.1 Check exterior lighting function	○	○	
1.2 Check window glazing	○	○	
1.3 Check fuel filler flap manual opening	○	○	
1.4 Check/adjust fluid level of brake system (bleed if required) - Ref. AA-RM-03C01-01-005	○	○	
1.5 Check/adjust fluid level of power steering - Ref. AA-RM-03D01-01-008	○	○	
1.6 Check windscreen wiper blade condition	○	○	

Interior function checks

2.0 - Carry out cluster checks	**Completed**	**Not Completed**	**Rectified**
2.1 Check engine oil level - Ref. AA-RM-04F02-01-007	○	○	
3.0 - Carry out interior functional checks	**Completed**	**Not Completed**	**Rectified**
3.1 Check condition and operation of seat belts/buckles (ensure belts are not twisted)	○	○	
3.2 Check Airbrake function using Dynamic Control Panel	○	○	

Mechanical checks

4.0 - Secure/lift vehicle on lifting platform - Ref. AA-RM-02A04-04-005					**Completed**	**Not Completed**	**Rectified**
4.1 Check/enter tyre pressure	FL:	FR:	RL:	RR:	○	○	
4.2 Measure tread depth (mm)	FL:	FR:	RL:	RR:	○	○	
Outside							
Center							
Inside							

5.0 - Remove wheels - Ref. AA-RM-03B03-01-001	**Completed**	**Not Completed**	**Comments**
5.1 Check front/rear axle wheel bearing play	○	○	
5.2 Visually check brake pads (replace if necessary)	○	○	
5.3 Visually check condition of brake discs (Remove and weigh if CCM) - Ref. AA-RM-03C01-01-006	○	○	
5.4 Check/clean air ducts of brake system	○	○	
6.0 - Remove Engine floor panel - Ref. AA-RM-02A04-04-001	**Completed**	**Not Completed**	**Rectified**
6.1 Check Engine/Transmission for leaks	○	○	
6.2 Check condition of drive shafts	○	○	
6.3 Check front/rear ball joints and track rods for play	○	○	
6.4 Check torque on suspension components	○	○	
6.5 Check all underfloors, tyre spoilers and front/rear guide vanes for damage	○	○	
7.0 - Install Engine floor panel - Ref. AA-RM-02A04-04-001	**Completed**	**Not Completed**	**Rectified**
7.1 Inspect wheel rim condition	○	○	
7.2 Check tyre orientation, damage, and crack formations	○	○	
7.3 Install wheels - Ref. AA-RM-03B03-01-001	○	○	
8.0 - Lower vehicle to ground	**Completed**	**Not Completed**	**Rectified**
8.1 Check wheel bolt torque values (130Nm)	○	○	
8.2 Check/adjust fluid level of cooling system	○	○	

Final operations

9.0 - Carry out documents/safety devices checks	Completed	Not Completed	Rectified
9.1 Check for wheel locking key	○	○	
9.2 Check for emergency fuel funnel	○	○	
9.3 Install/Remove towing eye - Install (pre)/Remove (post)	○	○	
9.4 Check for fire extingusher (option)	○	○	
9.5 Check for first aid kit (option)	○	○	
10.0 - Carry out final checks	**Completed**	**Not Completed**	**Rectified**
10.1 Report and rectify all recorded defects	○	○	

Check paint and panels for defects - please mark the picture as following: (D dent - S scratch - X damage)

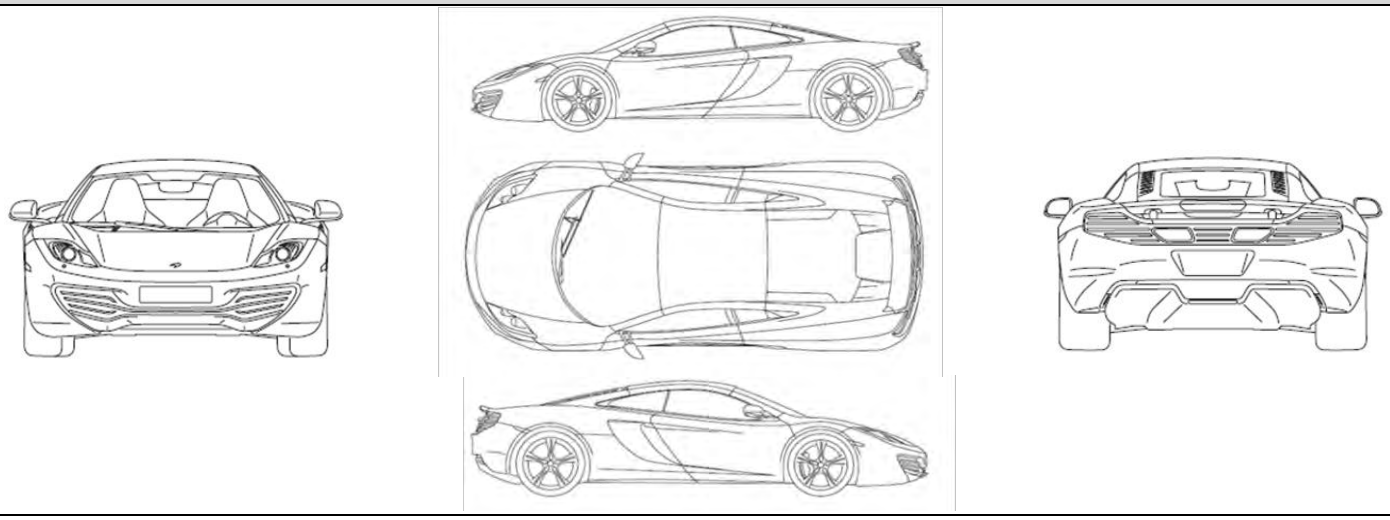

Associated Documents

Step Reference	Document Number	Document Title
1.4	AA-RM-03C01-01-005	Fill/bleed fluid - Brake system
1.5	AA-RM-03D01-01-008	Fill/bleed fluid - Steering system
2.1	AA-RM-04F02-01-007	Check engine oil level
4.0	AA-RM-02A04-04-007	Secure/lift vehicle on lifting platform
5.0 and 7.3	AA-RM-03B03-01-001	Remove/install Wheel
5.3	AA-RM-03C01-01-006	Cleaning/Checking carbon ceramic discs (CCM) / Iron discs (Fe)
6.0 and 7.0	AA-RM-02A04-04-001	Remove/install floor panel - Engine/fuel tank

Consumables / Sundries

Comments

Technician Name :	
Technician Signature :	**Dealer Stamp :**

Printed copy is not controlled